Fenix 110/110C/170
Xenio 110/110C/170

Sauna power unit
Instruction for installation and use

HARVIA
Sauna & Spa

Let's sauna.

Item.nr.
FX1104XC
FX1104CXC
FX1704XC

Item.nr.
CX1104XW
CX1104XWIP
CX1104CXW
CX1104CXWIP
CX1704XW





FX001XW

Control panel
Fenix

+

Power unit

CX001WIFI

Control panel
Xenio WiFi

+

Power unit

EN
DE
FR
ES
FI
SV
ET
HU
LV
LT
RU
PL
CS
NL
IT

Table of Contents

1. About this instruction manual 3

2. Important information for your safety 3

2.1. Intended use 4

2.2. Safety information for the installer 4

2.3. Safety information for the user 5

3. Product description 7

3.1. Delivery contents 7

3.2. Product functions 7

3.3. Installation example 8

4. Technical data 9

5. Installation 11

5.1. Installation sauna control unit 11

5.2. Installation heater sensor 12

5.3. Installation bench sensor 14

5.4. Installation sensor with air vent 14

5.5. Installation door sensor 15

6. Electrical connection 17

7. Connection diagram 18

7.1. Connection diagram 400V 3N~ FX1104XC, CX1104XW, CX1104XWIP 18

7.2. Connection diagram 400V 3N~ FX1704XC, CX1704XW 19

7.3. Connection diagram 400V 3N~ FX1104CXC, CX1104CXW, CX1104CXWIP 20

7.4. Connection diagram 230V 1N~ FX1104XC, CX1104XW, CX1104XWIP 21

8. Troubleshooting 22

9. Maintenance 24

10. Disposal 24

11. Spare parts 24

12. Warranty terms 24

1. About this instruction manual


Read the instructions and warnings carefully before using the product! Store it for future reference!


+ 
+ ... also read the instructions for all supplied devices.

Significance of the warnings and symbol


WARNING!
Serious or fatal injury can occur if this warning notice is not observed.


CAUTION!!
Minor injuries can occur if this warning notice is not observed.

ATTENTION!
This keyword is a warning that damage to property can occur.


This symbol indicates tips and useful information.


Do not cover

EN

2. Important information for your safety

The Harvia Fenix / Xenio control units have been manufactured according to the applicable safety regulations. However, hazards may arise during use. Therefore, please observe the following safety instructions and the specific warnings in the individual chapters. Also observe the safety instructions for the connected devices.

2.1. Intended use

The control unit is meant for controlling the functions of sauna and an elctric sauna heater.
The sauna heater is designed for the heating of a sauna room to bathing temperature.
It is not to be used for any other purpose!

They are suitable for cabins for private and commercial use.

The control unit is not suitable for outdoor use without a cover.

Excessive exposure to cold and intense sunlight must be avoided. If there is an increased risk of mechanical damage, the device must be protected against this.

2.2. Safety information for the installer

- Installation may only be performed by a qualified electrician or similarly qualified person.
- Always disconnect the device from the electricity network before carrying out any work (e.g. mounting, connection, maintenance)
- Check the device for visible damage before installing and using the device. Do not use a damaged device.
- A fully disconnecting all-pole isolating device compliant with overvoltage category III must be fitted on site.
- The device must be installed in such a way that the warning texts are easy to read after installation.
- The heater sensor must be installed in such a way that it is not affected by inflowing air.
- Always use silicone cables that are heat-resistant up to 150 °C to connect the sauna heater and the sensors.

- In public saunas, where the heater is used without a timer or continuously for longer than the timer of the heater or the control unit allows with the factory settings, the device must be constantly supervised.
- Observe the minimum safety distances of the used devices (see chapter “4. Technical data” on page 9)
- Also comply with the regulations applicable at the installation location.
- For your own safety, consult your supplier in the event of problems that are not explained in sufficient detail in the installation instructions.

2.3. Safety information for the user

- Observe the installation instructions for the sauna control unit and sauna heater used.
- The sauna room and surroundings of the heater must always be checked before the heater is switched on.
- The sauna room and surroundings of the heater must always be checked before the device is brought into standby mode required by remote control or pre-timed operation.
- All maintenance that requires special skills must be performed by a trained professional.
- Be aware of hot heater. The stones and metal parts of the heater may burn the skin. Never touch the sauna heater while it is operating.
- Never sleep in a hot sauna.
- Do not use the sauna to dry clothes or towels, as there is a risk of fire. The high humidity can damage electrical equipment or cause mold to grow in the sauna.

- Consult your doctor about any health-related limitations to bathing.
- The sauna control unit must not be used by children under 8 years.
- The sauna control unit may be used by children over 8 years, by persons with limited psychological, sensory or mental capabilities or by persons with lack of experience/knowledge, but only if:
  - They are supervised.
  - They have been shown how to use the device safely and are aware of the hazards that could occur.
- Children must not play with the sauna control unit.
- Children under 14 years may only clean the sauna control unit if they are supervised.
- For health reasons, do not use the sauna when under the influence of alcohol, medication or drugs.
- For your own safety, consult your supplier in the event of problems that are not explained in sufficient detail in the installation instructions.

3. Product description

Check the device for visible damage before installion. Do not use a damaged device. Contact your supplier if parts are damaged or missing.

3.1. Delivery contents

1. Power unit
2. Control panel Fenix / Xenio
3. Data cable RJ10, 5m
4. Heater sensor with integrated overheat protector, cable 4m, 4-pole
5. Bench senor: Humidity and temperatur sensor, cabel 4m, 2-pole for FX1104CXC, CX1104CXW(IP)
6. Door sensor with magnet, cable 5m for FX...., CX1104XWIP, CX1104CXWIP
7. Installation material
8. Installation instructions

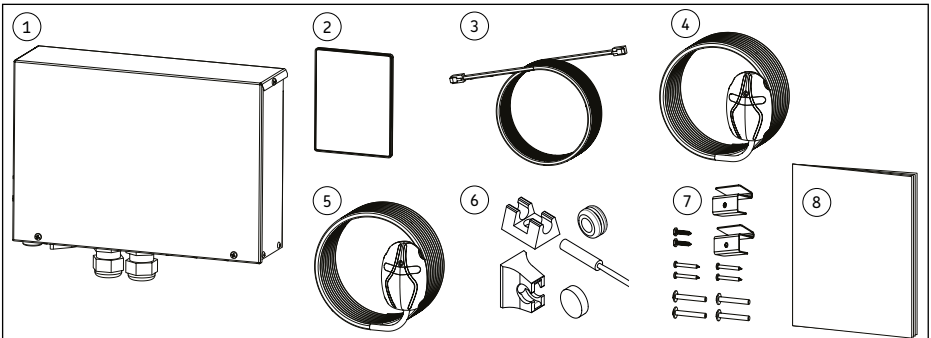

Fig. 1: Delivery contents

EN

3.2. Product functions

The Harvia sauna control units are used for operating and controlling the functions of a sauna and a sauna heater in accordance with the technical data.The control panel can also be used to control accessories such as sauna room lighting and ventilation.
The ability to control accessories depends on the connection properties of the device to be controlled. Device-specific information can be found in the manual for the device to be controlled. It is not to be used for any other purpose!

The sauna control units may only be used for operating and controlling a sauna heater which has been certified as satisfying the combustion test described in paragraph 19.101 and 19.102 of EN 60335-2-53. If the heater does not meet this requirement, an appropriate safety precaution must be taken (e.g.: safety or door switch).

The sauna control units may only be used for operating and controlling 3 heating circuits (see “4. Technical data” on page 9). The maximum steamer output is 3.6 kW.
The maximum power of the control units can be increased by using an optional power extension.

The sauna control unit regulates the temperature in the sauna room based on the informations given by the sensors. The heater sensor includes a temperature sensor and the overheat protector. Therefore, ensure that the sensor is positioned correctly (see “5.2. Installation heater sensor” on page 12).

Ensure adequate ventilation of the sauna cabin – the air should be exchanged six times per hour (see : “Fig. 5: Air ventilation” on page 12)

The Fenix control panel can be connected with the MyHarvia App. For example, you can use the App to display the status of the sauna heater, the temperature in the sauna cabin and the remaining heating time anywhere and at any time.

You need a reliable WiFi connection to use the MyHarvia App.

3.3. Installation example

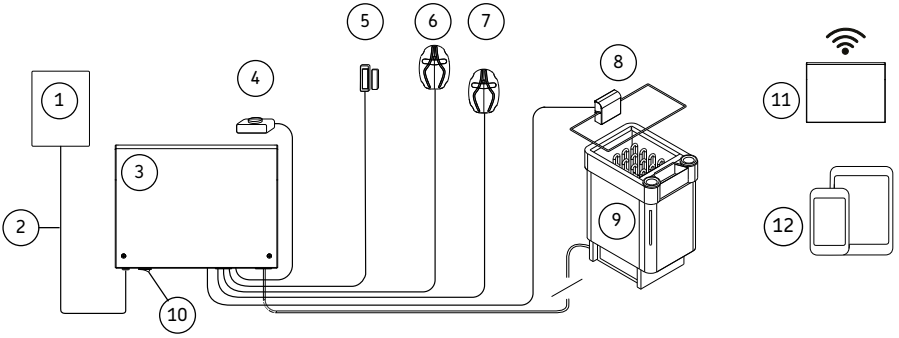

1. Control panel Fenix
2. Data cable
3. Power unit
4. Remot start switch *
5. Door sensor for FX.... and CX1104XWIP, CX1104CXWIP
6. Heater sensor
7. Bench sensor: Humidity and temperatur sensor for FX1104CXC, CX1104CXW(IP)
8. Safety switch *
9. Sauna heater
10. Main switch on/off
11. WiFi Router *
12. Mobile device + My Harvia *

* optional

Fig. 2: Installation example

4. Technical data

Model		FX1104XC CX1104XW CX1104XWIP	FX1104CXC CX1104CXW CX1104CXWIP	FX1704XC CX1704XW
Operating voltage [V]		400V / 415V 3N~	400V / 415V 3N~	400V / 415V 3N~
Frequency [Hz]		50 / 60	50 / 60	50 / 60
Max. power [kW]		11 (3 x 3.6)	11 (3 x 3.6)	17 (3 x 5.6)
Max. power steamer [kW]		-	3.6	-
Protection class		IPX5	IPX5	IPX3
Max. fuse (400V / 415V 3N~) [A]		3 x 16	3 x 16	3 x 25
Min. supply cord [mm²]		5 x 1.5	5 x 1.5	5 x 2.5
Weight [kg]		1.8	1.8	1.8
Storage temperatur [°C]		0 - +50	0 - +50	0 - +50
Ambient temperature [°C]		-10 - +70	-10 - +70	-10 - +70
Dimensions [mm]	Height	275	275	275
	Width	205	205	205
	Depth	80	80	80
Product minimum space requirements [mm]		300 x 350	300 x 350	300 x 350
Type of mounting		On-wall	On-wall	On-wall
Installation in the sauna		yes	yes	no
Mounting surface temperatur [°C]		max. 70	max. 70	max. 70
Power unit installation height in the sauna [mm]		max. 400	max. 400	-
Distance to the sauna heater in the sauna [mm]		min. 1000	min. 1000	-
Setting range temperatur [°C]		40 - 110	40 - 110	40 - 110
Setting range steamer [%]		-	0 - 100	-

EN

Model	**FX1104XC CX1104XW CX1104XWIP**	**FX1104CXC CX1104CXW CX1104CXWIP**	**FX1704XC CX1704XW**
Heater sensor type	SP247M	SP247M	SP247M
Bench sensor type	optional	SP325M	optional
Max. length of sensor cable [m]	10	10	10
Dimensions sensors [mm]	51 x 73 x 27	51 x 73 x 27	51 x 73 x 27
Data cable to control unit 5m	SP311	SP311	SP311
Light (230V AC 1N) [W] *	max. 100	max. 100	max. 100
Fan (230V AC 1N) [W]	max. 100	max. 100	max. 100

*** ATTENTION! -** ***Damage the device***
Do not connect/use LED that require a transformer. Transformers will damage the light output.

Model	**Door sensor**
Operating temperature	-20 - +85 °C
Air humidity	max.99 rH
Dimensions door sensor	Ø 6 × 32 mm
Connection cable door sensor	5 m - 2 x 0.14 mm²
Switching distance	23 mm front / 20 mm lateral
Dimension sensor holder	20 × 15 × 10 mm
Dimension magnet	Ø 10 × 3 mm
Dimension magnet holder	8 × 12 × 15 mm

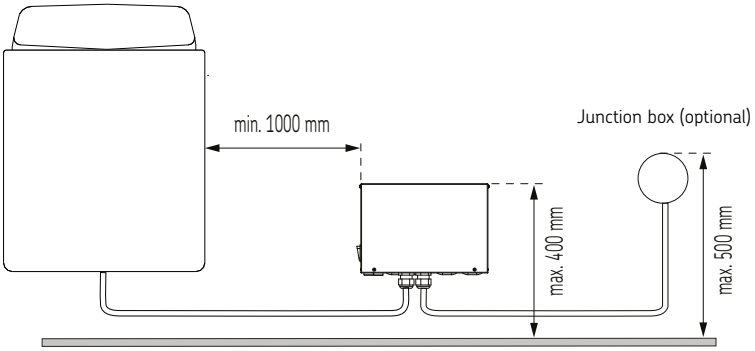

Fig. 3: Positioning power unit

5. Installation

5.1. Installation sauna control unit

ATTENTION! - *Damage the device*
Do not embed the control unit into the wall, since this may cause excessive heating of the internal components of the unit.

Install the power unit in a dry area outside the sauna, or in the sauna room in as cool and dry a place as possible. Observe the required minimum and maximum distances (see Fig. 3). Fix the power unit to the wall.

Note that the sauna control units CX1104XW, CX1104CXW,FX1704XC, CX1704XW, can be mounted only outside the cabin (IPX3).

The sauna control units FX1104XC, FX1104CXC, CX1104XWIP, CX1104CXWIP are IPX5, so they can be mounted both outside and inside the cabin. Also note the “4. Technical data” on page 9.

EN

ATTENTION! - *Damage the device*
The cable glands must not point upwards! After completing the connection work tighten the screw caps on the cable glands to achieve a tight seal.

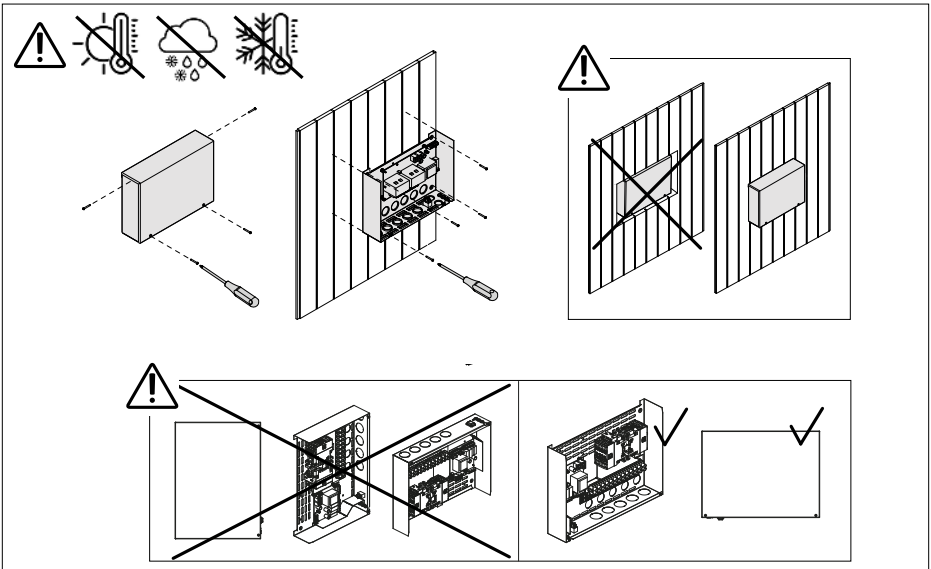

Fig. 4: Installation power unit

5.2. Installation heater sensor

Always check the correct location for the temperature sensor from the heater's installation instructions.

If a temperatur sensor is delivered with the heater, use this sensor and install it according to the heater´s installation instructions. Otherwise, use the temperatur sensor delivered with the control unit.

ATTENTION! - *Interference can impair signal transmission*
The sensor cable must be laid separately from other mains cables and control cables.

Wall-mounted heaters (Fig. 6 on page 13)

- Fasten the temperature sensor on the wall above the heater, along the vertical centre line running parallel to the sides of the heater, at a distance of 100 mm from the ceiling.

Floor-mounted heaters (Fig. 7 on page 13)

- Option 1: Fasten the temperature sensor on the wall above the heater, along the vertical centre line running parallel to the sides of the heater, at a distance of 100 mm from the ceiling.
- Option 2: Fasten the temperature sensor to the ceiling above the heater, at a distance of 200 mm from the vertical centre line of the heater's side.

With a separate steamer, observe that the temperature sensor must not be installed in the area affected by steam.

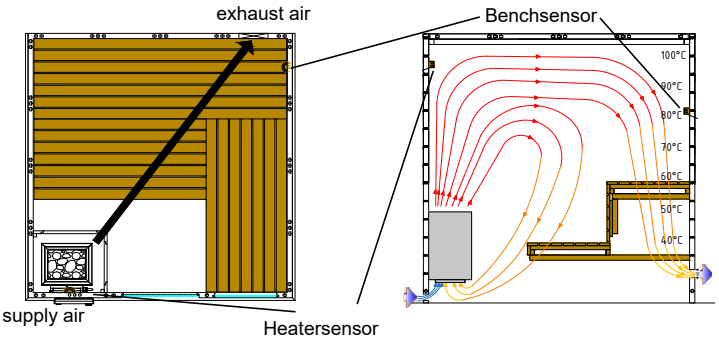

Fig. 5: Air ventilation

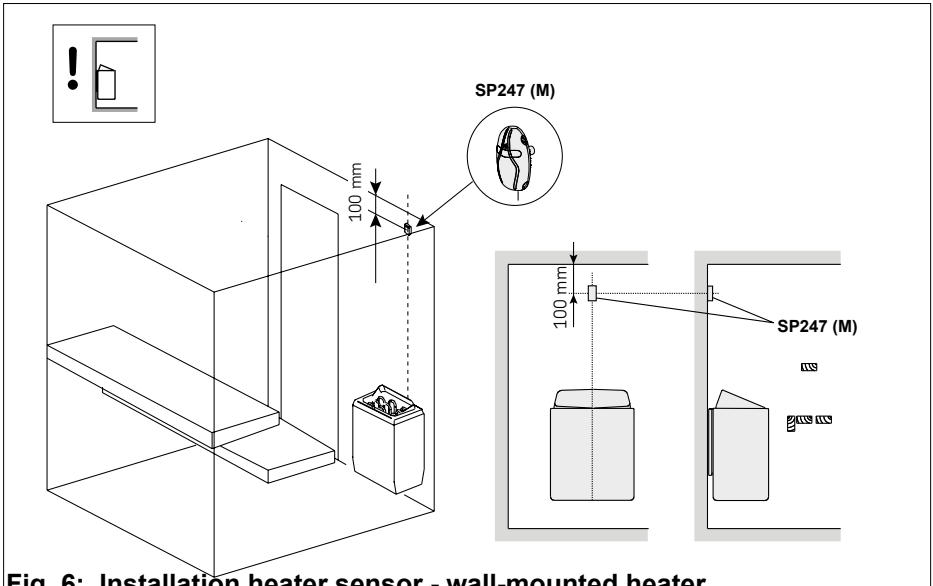

Fig. 6: Installation heater sensor - wall-mounted heater

EN

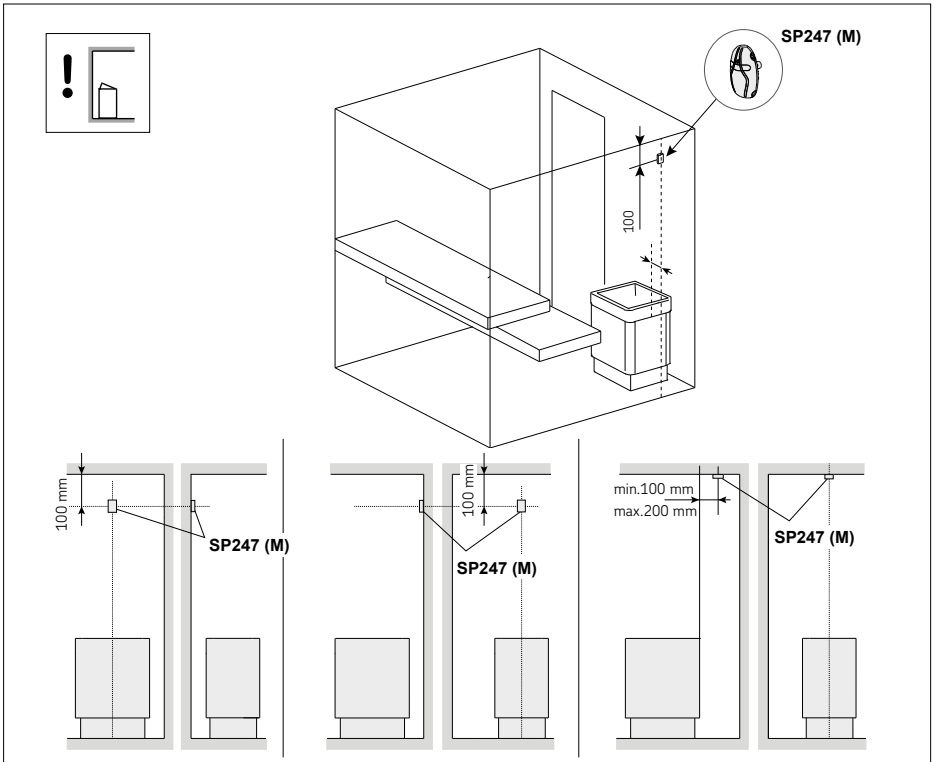

Fig. 7: Installation heater sensor - floor-mounted heater

5.3. Installation bench sensor

Fasten the humidity sensor on the wall as far from the heater as possible and at a distance of 500–700 mm from the ceiling.

ATTENTION! - ***Interference can impair signal transmission***

The sensor cable must be laid separately from other mains cables and control cables.

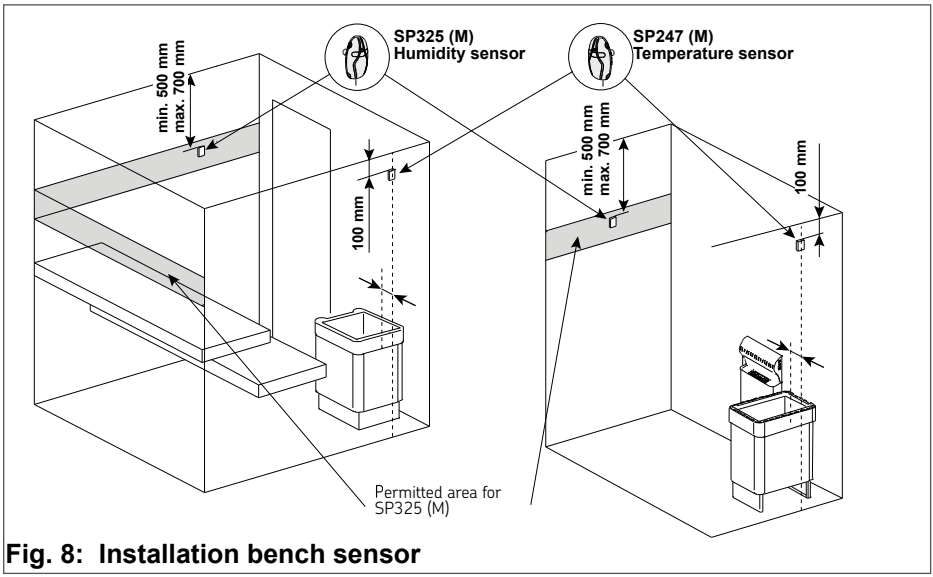

Fig. 8: Installation bench sensor

5.4. Installation sensor with air vent

Do not install the temperature sensor closer than 1000 mm to an omnidirectional air vent or closer than 500 mm to an air vent directed away from the sensor. The air flow near an air vent cools down the sensor, which gives inaccurate temperature readings to the control unit. As a result, the heater might overheat.

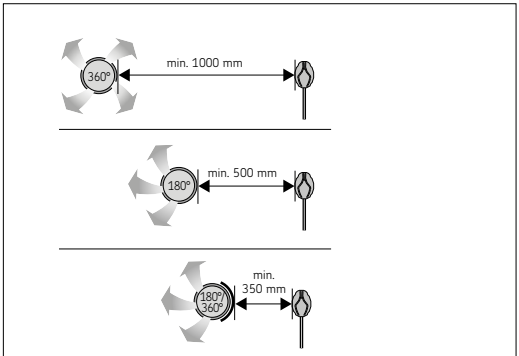

Fig. 9: Installation sensor with air vent

5.5. Installation door sensor

Installation of a sensor on a door frame:

- Attach the sensor holder to the door frame, using either a screw (Fig. 10A) or double-sided tape (Fig. 10B).
- Install the sensor in the holder (Fig. 10C).
- Note: If the door frame is sheet metal and there is room for the sensor behind it, the sensor can also be attached using a grommet (Fig. 10D). Use an 8 mm drill bit.

Attaching the magnet to the door:

- Fix the magnet holder to the door, using either a screw (Fig. 10E) or double-sided tape (Fig. 10F).
- Press the magnet into place in the holder (Fig. 10G).
- The magnet can also be mounted on the door using only double-sided tape (Fig. 10H).

EN

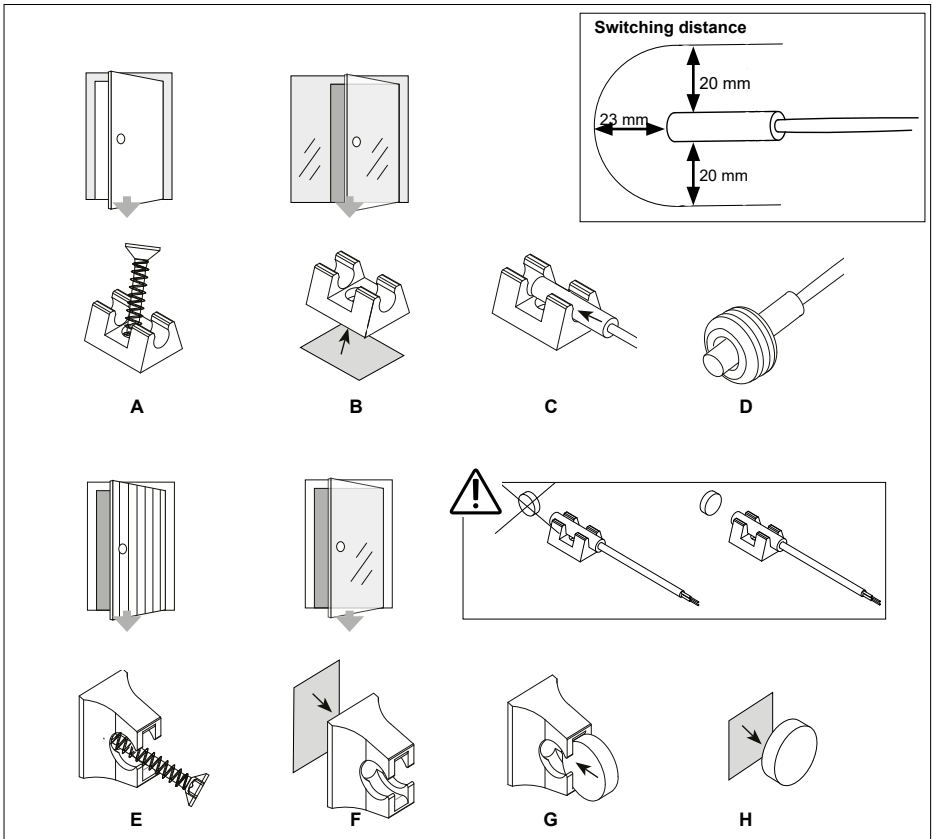

Fig. 10: Installation door sensor

6. Electrical connection

The sauna control unit may only be connected to the electrical network in accordance with the current regulations by an authorised, professional electrician.

Please observe that in the event of a guarantee claim, a copy of the bill from the electrician performing the work must be presented.

Work on the sauna control unit may only be performed when the power has been disconnected.

There must be a fixed connection for the electrical power supply.

A fully disconnecting all-pole isolating device compliant with overvoltage category III must be fitted on site.

The cable glands must point downwards! After completing the connection work tighten the screw caps on the cable glands to achieve a tight seal.

Connect the cables to the terminal strips in accordance with the connection diagrams, see Fig.11,12, 13 or Fig.14. Also follow the installation instructions for each device.

ATTENTION! - ***Interference can impair signal transmission***
The sensor cable must be laid separately from other mains cables and control cables.

Using a combi heater or seperate steamer (FX1104CXC, CX1104CXW, CX1104CXWIP)
Connect the wires to the terminals W1 (phase) and P (water empty indication)

Using a door sensor / safety switch:
Connect the wires to the plug contacts X15 and X16

Using remote start:
Connect the wires of the switch to the plug contacts X14 and X15

Using a power extension:
The power extension unit includes detailed instruction of installation. It is controlled using plug contacts K1=ST1 and K2=ST2.

Controlling an external device (e.g. electrical heater, autodose)
Terminals K1 and K2 of the power unit can also be used to control e.g. electrical heating. When the heater is turned on from the control unit, voltage is generated in terminal K1. When the heating elements are engaged, voltage is generated in terminal K2. These signals can be used to guide the heating to be turned off.

7. Connection diagram

7.1. Connection diagram 400V 3N~
FX1104XC, CX1104XW, CX1104XWIP

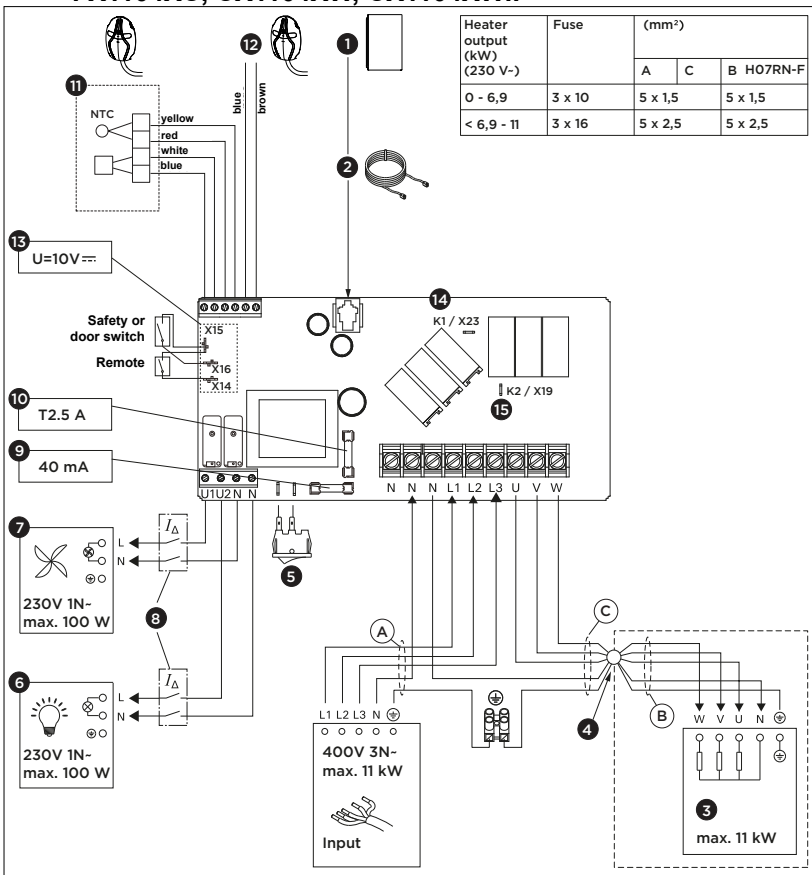

1. Control panel
2. Data cable
3. Heater
4. Junction box (optional)
5. Main switch
6. Lighting (optional)
7. Fan (Optional)
8. Residual current device
9. Fuse for electronic card (slow)
10. Fuse for relay outputs (ceramic, slow)
11. Heater sensor (Temperature sensor)
12. Bench sensor (optional)
13. Contacts for safety devices
    - X14: Remote activation switch on/off
    - X15: GND (common)
    - X16: Safety or door switch
14. K1 = ST1 Control of electric heating max. 100 W (Optional, must be fused if used)
15. K2 = U= ST2
    K1+W+U1+U2 = max. 3680 W (L1)

Fig. 11:

EN

7.2. Connection diagram 400V 3N~
FX1704XC, CX1704XW

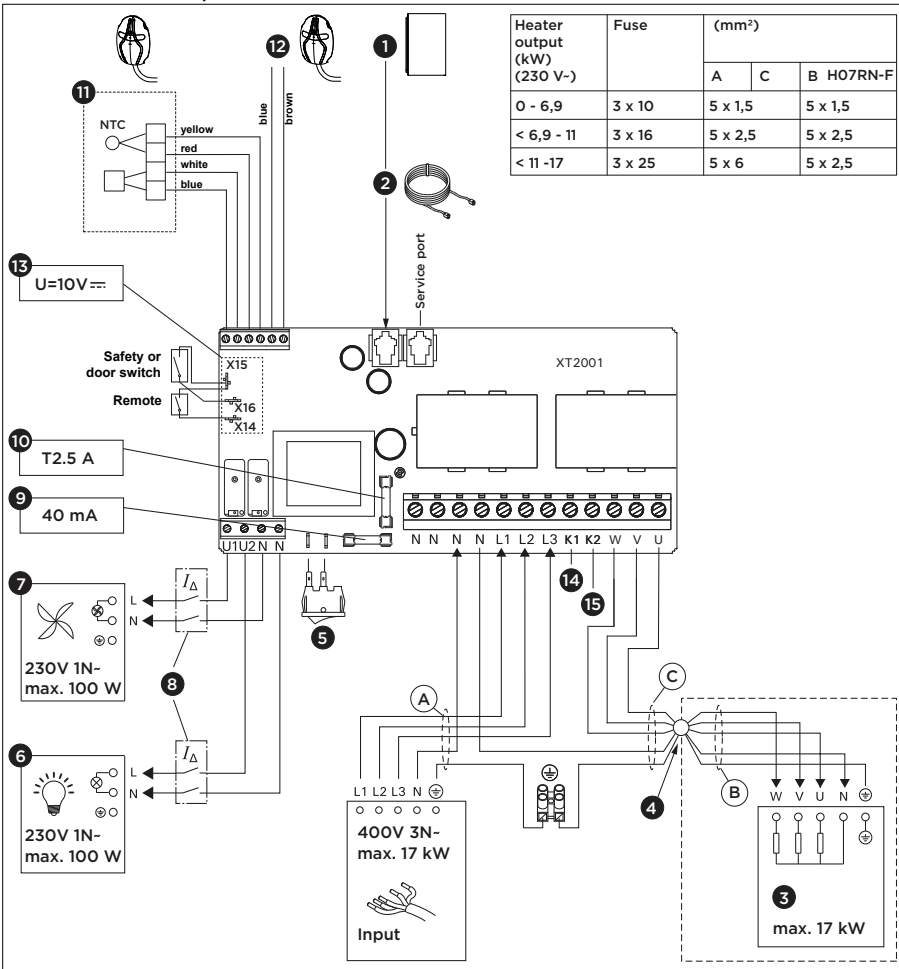

Heater output (kW) (230 V~)	Fuse	(mm²)		
		A	C	B H07RN-F
0 - 6,9	3 x 10	5 x 1,5		5 x 1,5
< 6,9 - 11	3 x 16	5 x 2,5		5 x 2,5
< 11 -17	3 x 25	5 x 6		5 x 2,5

1. Control panel
2. Data cable
3. Heater
4. Junction box (optional)
5. Main switch
6. Lighting (optional)
7. Fan (Optional)
8. Residual current device
9. Fuse for electronic card (slow)
10. Fuse for relay outputs (ceramic, slow)
11. Heater sensor (Temperature sensor)
12. Bench sensor (optional)
13. Contacts for safety devices
    - X14: Remote activation switch on/off
    - X15: GND (common)
    - X16: Safety or door switch
14. K1 = ST1 Control of electric heating max. 100 W (Optional, must be fused if used)
15. K2 = U= ST2
    K1+K2+W = max. 5670 W (L3)

Fig. 12:

7.3. Connection diagram 400V 3N~

FX1104CXC, CX1104CXW, CX1104CXWIP

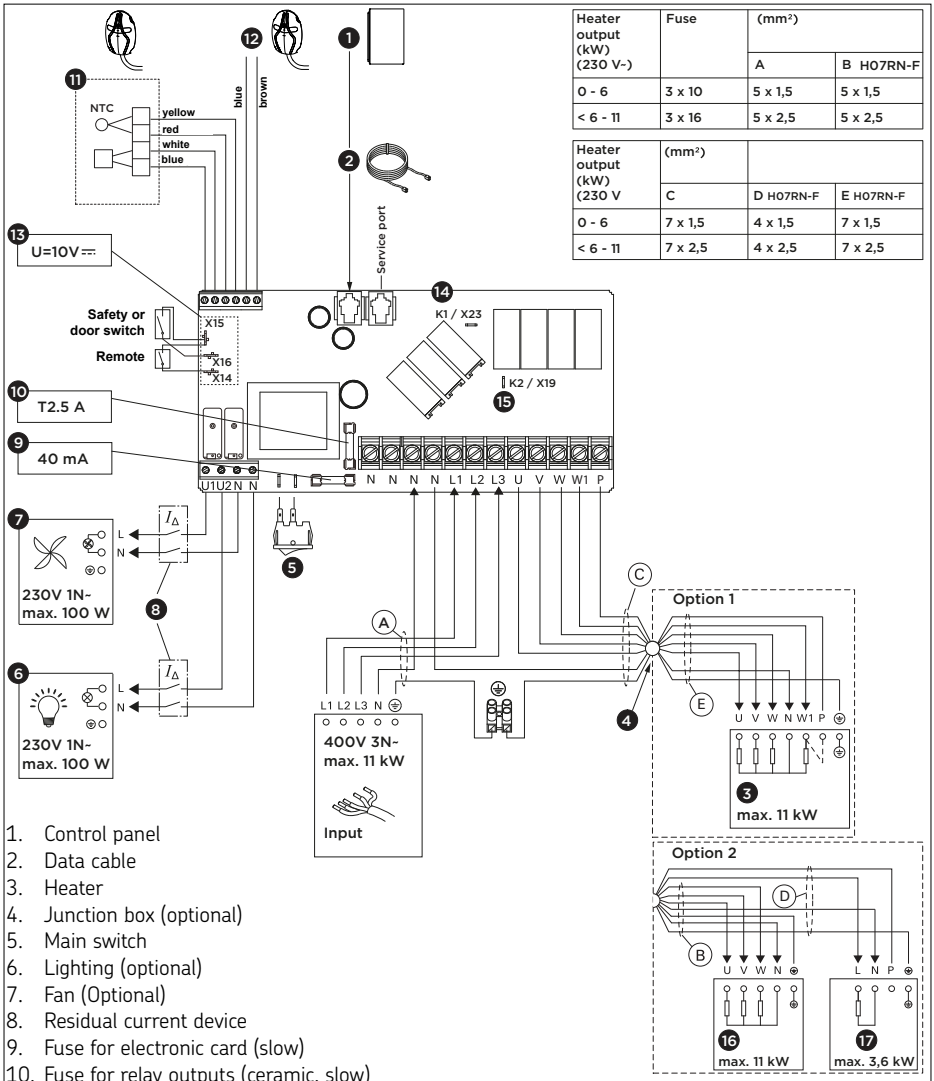

Heater output (kW) (230 V~)	Fuse	(mm²)	
		A	B H07RN-F
0 - 6	3 x 10	5 x 1,5	5 x 1,5
< 6 - 11	3 x 16	5 x 2,5	5 x 2,5

Heater output (kW) (230 V	(mm²)		
	C	D H07RN-F	E H07RN-F
0 - 6	7 x 1,5	4 x 1,5	7 x 1,5
< 6 - 11	7 x 2,5	4 x 2,5	7 x 2,5

1. Control panel
2. Data cable
3. Heater
4. Junction box (optional)
5. Main switch
6. Lighting (optional)
7. Fan (Optional)
8. Residual current device
9. Fuse for electronic card (slow)
10. Fuse for relay outputs (ceramic, slow)
11. Heater sensor (Temperature sensor)
12. Humidity and temperature sensor
13. Contacts for safety devices
    - X14: Remote activation switch on/off
    - X15: GND (common)
    - X16: Safety or door switch
14. K1 = ST1 Control of electric heating max. 100 W (Optional, must be fused if used)
15. K2 = U= ST2
    K1+W+U1+U2 = max. 3680 W (L1)

Fig. 13:

EN

7.4. Connection diagram 230V 1N~

FX1104XC, CX1104XW, CX1104XWIP

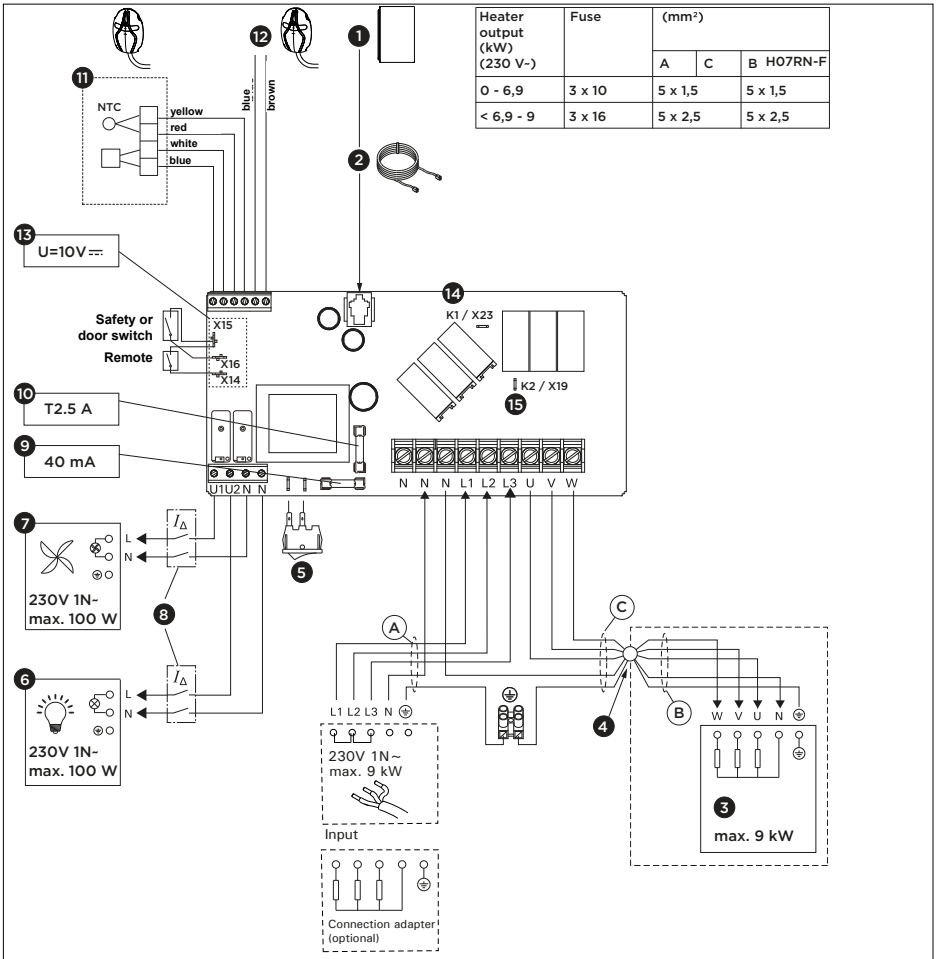

Heater output (kW) (230 V~)	Fuse	(mm²)		
		A	C	B H07RN-F
0 - 6,9	3 x 10	5 x 1,5		5 x 1,5
< 6,9 - 9	3 x 16	5 x 2,5		5 x 2,5

1. Control panel
2. Data cable
3. Heater
4. Junction box (optional)
5. Main switch
6. Lighting (optional)
7. Fan (Optional)
8. Residual current device
9. Fuse for electronic card (slow)
10. Fuse for relay outputs (ceramic, slow)
11. Heater sensor (Temperature sensor)
12. Bench sensor (optional)
13. Contacts for safety devices
    - X14: Remote activation switch on/off
    - X15: GND (common)
    - X16: Safety or door switch
14. K1 = ST1 Control of electric heating max. 100 W (Optional, must be fused if used)
15. K2 = U= ST2
    K1+W+U1+U2 = max. 3680 W (L1)

Fig. 14:

8. Troubleshooting

If an error occurs, the heater power will cut off and the control panel will show an error message E(number).The following table describes possible errors and how to rectify them. If there is no help, please contact your supplier or use the Link to the Frequently Asked Questions (FAQ).

	Description	*Cause / rectification*
E1	Temperature sensor's measuring circuit broken.	Check the red and yellow wires to the temperature sensor and their connections for faults.
E2	Temperature sensor's measuring circuit short-circuited.	Check the red and yellow wires to the temperature sensor and their connections for faults.
E3	Overheat protector's measuring circuit broken.	Press the overheat protector's reset button. Check the blue and white wires to the temperature sensor and their connections for faults.
E5	Water level low or steamer's overheat protector engaged. Water level warning light blinks.	Add water or check the water supply. Check the steamer´s or combi heaters´s overheat protector.
E6	Optional sensor's temperature measuring component failure	Check the brown and blue wires to the optional sensor and their connections for faults.
E7 E8	Humidity sensor's humidity measuring component failure	Check the brown and blue wires to the humidity sensor and their connections for faults.
E9	Connection failure between the control panel and the power unit.	Check the cable and the connectors.
	FENIX-Control panel does not light up	Switch on the main switch on the power unit or heater. Check the data cable and the fuses.
	FENIX-Control panel cannot connect	Make sure that the WiFi network to be connected is sufficiently strong. The network name cannot contain any special characters.

EN

	Description	*Cause / rectification*
	WiFi connection is interrupted during setup	The name of the WiFi network contains inadmissible characters.
	Cannot connect or WiFi connection terminates during setup	The WiFi module requires access to port 8883 (secure MQTT), which must be opened in the firewall. Additionally, there must be access for Network Time Protocol (NTP) servers. Also check that other ports are not blocked, especially 443, 8443 and 8883..
	FENIX-Control panel switches off during operation.	Check the installation conditions to see whether the temperatures on the control panel or the power unit are too high.
	WiFi is not connected after a blackout	Switch the power supply to the sauna control unit off and on.
	SAFE	Safety switch circuit is open. Remove the object from atop the safety switch.
	door open	Door switch circuit is open. Close the sauna room door.
	rESt	Pause time active
	rc on	Remote control activated

Resetting the overheat protector of the heater sensor:
The heater sensor (SP247M) contains a temperature sensor and an overheat protector. If the temperature in the sensor's environment rises too high (135°C), the overheat protector cuts off the heater power.

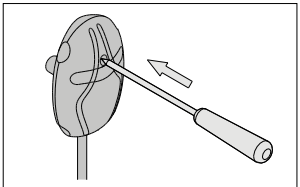

Fig. 15:

Fuses:

The placement of the fuses in the power unit is shown in Fig. 11 and 12. Replace a blown fuse by a new one with the same value.

There are fuses for electronic card (40mA) and relay outputs (T2.5A)

9. Maintenance

The device is maintenance-free. Update takes place automatically when the device is connected to the WiFi.

Clean the product with a slightly damp cloth. Only use water or mild cleaning agents.

10. Disposal



- Dispose of packaging materials in accordance with the applicable waste disposal regulations.
- Used devices contain reusable materials as well as hazardous substances. Therefore, do not dispose of your used device with household waste, but do so in accordance with the locally applicable regulations.

EN

11. Spare parts

spareparts.harvia.com

12. Warranty terms

www.harvia.com

Fenix 110/110C/170
Xenio 110/110C/170

Saunasteuerung
Montage- und Gebrauchsanleitung

HARVIA
Sauna & Spa

Let's sauna.

Artikel Nr.
FX1104XC
FX1104CXC
FX1704XC

Artikel Nr.
CX1104XW
CX1104XWIP
CX1104CXW
CX1104CXWIP
CX1704XW

DE





FX001XW

Bedienteil Fenix + Leistungteil

CX001WIFI

Bedienteil Xenio XW + Leistungteil

CE UKCA

Inhaltsverzeichnis

1. Zu dieser Anleitung ... 3

2. Wichtige Informationen für Ihre Sicherheit ... 3

2.1. Bestimmungsgemäßer Gebrauch ... 4

2.2. Sicherheitshinweise für den Monteur ... 4

2.3. Sicherheitshinweise für den Benutzer ... 5

3. Produktbeschreibung ... 7

3.1. Lieferumfang ... 7

3.2. Produktfunktionen ... 7

3.3. Installationsbeispiel ... 8

4. Technische Daten ... 9

5. Montage ... 11

5.1. Montage Leistungsteil ... 11

5.2. Montage Ofenfühler ... 12

5.3. Montage Bankfühler ... 14

5.4. Montage Fühler - bei Belüftung ... 14

5.5. Montage Türsensor ... 15

6. Elektroanschluss ... 16

7. Anschlussplan ... 17

7.1. Anschlussplan 400V 3N~
FX1104XC, CX1104XW, CX1104XWIP ... 17

7.2. Anschlussplan 400V 3N~
FX1704XC, CX1704XW ... 18

7.3. Anschlussplan 400V 3N~
FX1104CXC, CX1104CXW, CX1104CXWIP ... 19

7.4. Anschlussplan 230V 1N~
FX1104XC, CX1104XW, CX1104XWIP ... 20

8. Problemlösung ... 21

9. Wartung ... 23

10. Entsorgung ... 23

11. Ersatzteile ... 23

12. Garantiebedingungen ... 23