

HARVIA VEGA

HCB800400S

The stainless steel outer shell of Vega is durable and creates a modern look for your sauna. The operating switches are placed ergonomically in the upper part, and thanks to the symmetric shape of the heater, the switches can be placed on either side.



Features

Main material : Steel

H x W x D : 540.0 x 480.0 x 310.0 mm

Net weight (kg) : 11.4

Installation location : Wall

ID	GTIN	Output (kW)	Sauna room size min - max m3
HCB800400S	6410082608089	8 kW	7.0-12.0

Related products



SFE-220400



Spare parts

Product	ID	Pcs
Heating element 2670W 230V, Vega	SPZSB-228	3
Knob thermostat Vega, black	SPZSB-115	1
Knob timer 4+8h Vega, black	SPZSB-125	1
Timer 4+8h complete, Vega BC45-90	SPZSK-511	1
Thermostat overheating limiter switch	SPZSK-520	1
Variant 2380*1945 sauna cabin	S2520	
Variant 2195*1945	S2220	
Variant 2195*1945	S2220H	
Variant 2195*1945 left	S2220L	
Variant 2195*1945 right	S2220R	
Variant 2195*2195	S2222	
Variant 2195*2195 right	S2222R	
Variant 2380*1945 left sauna cabin	S2520L	
Variant 2380*1945 right sauna cabin	S2520R	
Variant 2380*2195 left	S2522L	
Variant 2380*2195	S2522M	
Variant 2380*2195 right	S2522R	
	SPZSB-200	1

Technical details

Technical data	Type / attribute	HCB800400S
	Color	Stainless Steel
	Power output	8 kW
	Stone sizes	Ø5–10 cm
	Stone amount (kg)	20
Dimensions	Product width	480
	Product height	540
	Product depth (mm)	310
	Net weight (kg)	11.4
	Gross weight	12.8
	Package width	315
	Package height	475
	Package depth	500
Safety and installation dimensions	Safety distance front (combustible materials)	30
	Safety distance right side (combustible materials)	30
	Safety distance left side (combustible materials)	30
	safety distance to the side wall (combustible materials)	100
	Safety distance (Ceiling)	1100
	Room min. height(depends on connections and therefore from output, star/delta)	1900
	Installation opening height	1900
	Installation opening width	610
	Installation opening depth	340



Technical images

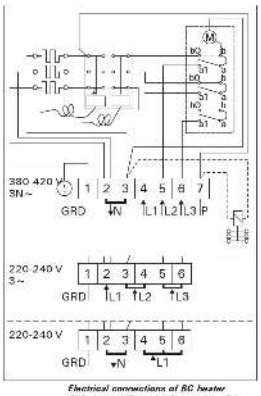

Electrical connections of BC heater
Elektroanschlüsse des Saunaofens BC

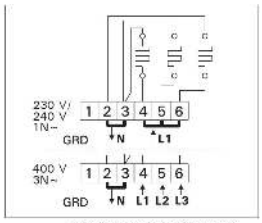

Electrical connections of BC-E heater
Elektroanschlüsse des Saunaofens BC-E

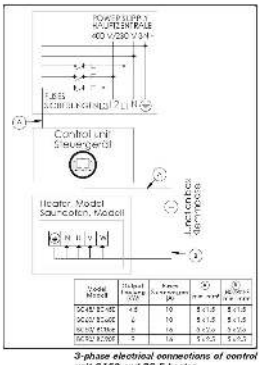

3-phase electrical connections of control unit C150 and BC-E heater
3 phasiger Elektroanschlüsse das Steuergerät C150 und des Saunaofens BC-E

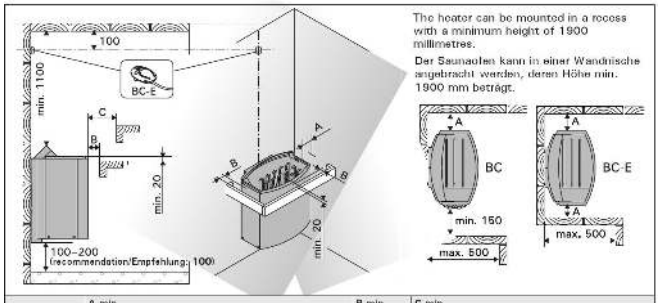

	A min. from side to wall, upper platform or rail von der Seitenfläche zur Wand, zur oberen Bank oder zum oberen Geländer	B min.	C min. from front surface to upper platform or rail von der Vorderfläche zur oberen Bank oder zum oberen Geländer
BC45/BC45E	35	20	35
BC60/BC60E	50	30	50
BC80/BC80E	100	30	80
BC90/BC90E	120	40	100