HARVIA HGX

HGX90 | HGX60 | HGX11 | HGX2 | HGX15 | HGX45

The Harvia HGX steam generator is a source of well-being and relaxation. Create a spa atmosphere in your home, let the warm steam caress your senses and forget your hectic everyday life for a moment. Harvia HGX is also a reliable solution for spas, providing perfect moments of indulgence for your customers. The steam generator can also be equipped with an accessory touch control panel to create ethereal fragrances and an atmospheric lighting in your steam room. In the course of more than 60 years, Harvia has grown into the world's largest sauna heater and stove manufacturer to create perfect spa experiences to match your dreams.



Advantages

- Easy to use, easy maintenance
- The steam generator is controlled by a separate stylish touch-screen control panel that can also control fragrance pump, lighting and fan
- Water level is measured in clean water, in a separate measuring cup to prevent problems caused by water impurities
- A sediment cup collects water impurities that fall on the bottom of the water container.
- Designed for high output demanding spa use

Features

Main material : Steel
H x W x D : 230.0 x 150.0 x 530.0 mm
Installation location : Wall

Net weight (kg) : 9.7
Water container volume : 4.0

ID	GTIN	Output (kW)	Steam output (kg/h)	Steam room size min - max m3
HGX90	6410082612260	9 kW	12	3.0-17.0
HGX60	6410082612253	5.7 kW	7.6	2.0-11.0
HGX11	6410082612277	10.8 kW	14.6	6.0-21.0
HGX2	6417659016667	2.2 kW	2	2.0-4.0
HGX15	6410082612703	15 kW	20.1	8.0-28.0
HGX45	6410082612222	4.5 kW	5.5	2.0-7.0

Related products

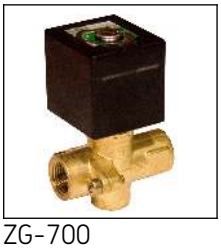
ZG-700


ZG-900


HWF01M



ZG-520

Spare parts

Product	ID	Pcs
Surface sensor HGS	SPZG-150	
Overheat protector HGS/HGX/HGP	SPZG-550	
Drain valve hot water HGS/HGX	SPZG-575	
Temperature sensor steam	SPZG-660	
Contactor 4 blocks 30A 100-240VACDC 50/60 Hz	SPZSK-778	
Outlet pipe D18 steam, copper	SPZSTM-040	
Water supply hose Helix	SPZSTM-047	
Pipe adapter 18 mm - G 1/2"	SPZSTM-050	
Water supply pipe assembly, copper	SPZSTM-070	
Xenio user interface, white	WX388	
Helix control panel complete	WX602	1
Water level measuring unit	WX620	1
Circuit board steam.gen. 2018	WX645	1
Surface sensor HGS	ZG-150	1
Heating element 3000W/230V	ZG-350	3
Heating element 3600W/230V	ZG-360	1
Steam nozzle	ZG-500	1
Overheat protector HGS/HGX	ZG-550	1
Manual discharge valve HGS/HGX	ZG-575	1
Temperature sensor HGS/HGX	ZG-660	1
On/off electric switch	ZSK-684	1
Contactor ABB LS.17.10 230V	ZSK-778	2
Solenoid valve	ZSS-610	1
Steam outlet pipe Helix	ZSTM-040	1
Water supply hose Helix	ZSTM-047	1
Pipe adapter 18 mm - G 1/2 '	ZSTM-050	1
Insulating for water reservoir	ZSTM-060	1
Water supply pipe assembly	ZSTM-070	1
Water outlet pipe assembly	ZSTM-071	1
Rubber gasket D18	ZSTM-140	4
Rubber plug	ZSTM-155	1
Service hatch cover	ZSTM-160	1
Sediment cup	ZSTM-170	1

Board Connections

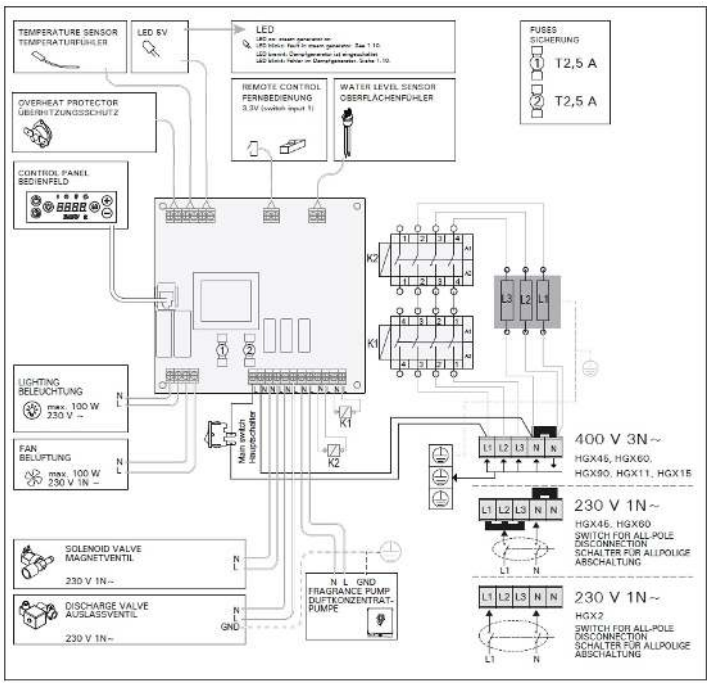

Installation measurements

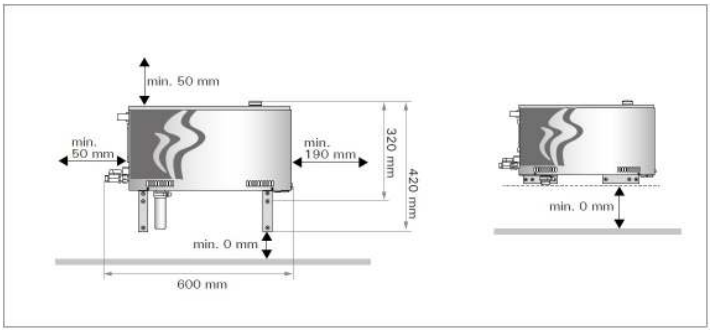

Connections

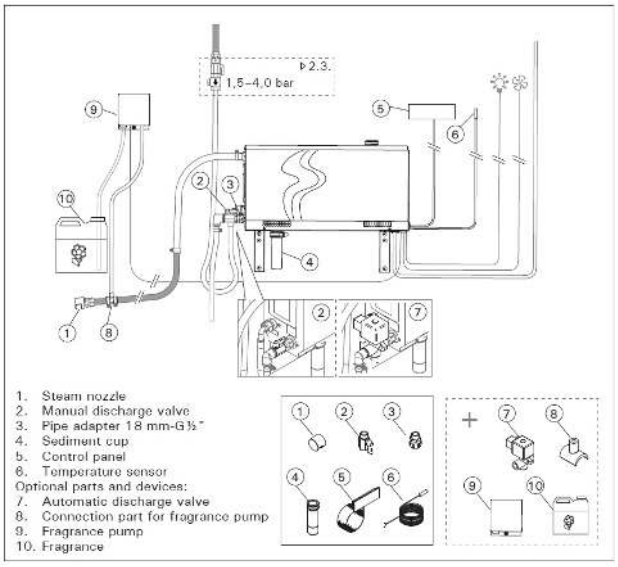

Technical details

Technical data	Type / attribute	HGX90	HGX60	HGX11
	Power output	9 kW	5.7 kW	10.8 kW
	Fuses (400V3N~) pcs x ampers	3 x 16 A	3 x 10 A	3 x 16 A
	Fuse (230V1N~) ampers	N/A	25 A	N/A
	Max. Connection power for light	100.0		100.0
	Switch input voltage			
	IP Class (like: IPX4)	IPX2	IPX2	IPX2
	Steam output capacity (kg/h)	12	7.6	14.6
Dimensions	Product width	150.0	150.0	150.0
	Product height	230.0	230.0	230.0
	Product depth (mm)	530.0	530.0	530.0
	Net weight (kg)	9.7	9.7	10.2
	Water container volume	4.0	4.0	4.0
	Sensor cable length	5.0		5.0
	Control unit cable lenght	5.0	5.0	5.0
Connections	Steam out connections	Ø18 mm	Ø18 mm	Ø18 mm
	Water in connections	G¾" male	G¾" male	G¾" male
	Water out connections	G½" female	G½" female	G½" female
	Supply cable (400V 3N~) mm2	5 x 2.5 mm2	5 x 1.5 mm2	5 x 2.5 mm2
	Supply cable (230V 1N~) mm2			
	Sensor lead (230 V 1N~) mm2			
Room volumes	Steam room size light wall (acrylic, etc.) not ventilated	9.0-17.0	3.5-11.0	15.0-21.0
	Steam room size light wall (acrylic, etc.) ventilated	6.0-12.0	2.5-8.0	10.0-14.5
	Steam room size tiled light wall not ventilated	7.5-14.0	3.0-9.0	12.0-17.0
	Steam room size tiled light wall ventilated	4.5-10.0	2.0-6.0	8.0-12.0
	Steam room size tiled stone wall not ventilated	6.0-11.5	2.0-7.5	10.0-14.0
	Steam room size tiled stone wall ventilated	3.0-8.0	2.0-5.0	6.0-10.0
Ambient conditions	Storage temperature			
	Ambient temperature			

Technical details

Technical data	Type / attribute	HGX2	HGX15	HGX45
	Power output	2.2 kW	15 kW	4.5 kW
	Fuses (400V3N~) pcs x ampers	N/A	3 x 25 A	3 x 10 A
	Fuse (230V1N~) ampers	10 A	N/A	25 A
	Max. Connection power for light			100.0
	Switch input voltage			
	IP Class (like: IPX4)	IPX2	IPX2	IPX2
	Steam output capacity (kg/h)	2	20.1	5.5
Dimensions	Product width	150.0	150.0	150.0
	Product height	230.0	230.0	230.0
	Product depth (mm)	530.0	530.0	530.0
	Net weight (kg)	8.7	10.2	9.7
	Water container volume	4.0	4.0	4.0
	Sensor cable length	5.0	5.0	5.0
	Control unit cable lenght	5.0	5.0	5.0
Connections	Steam out connections	Ø18 mm	Ø18 mm	Ø18 mm
	Water in connections	G¾" male	G¾" male	G¾" male
	Water out connections	G½" female	G½" female	G½" female
	Supply cable (400V 3N~) mm2		5 x 2.5 mm2	5 x 1.5 mm2
	Supply cable (230V 1N~) mm2			
	Sensor lead (230 V 1N~) mm2			
Room volumes	Steam room size light wall (acrylic, etc.) not ventilated	2.0-4.0	17.0-28.0	2.0-7.0
	Steam room size light wall (acrylic, etc.) ventilated	2.0-4.0	12.0-19.5	2.0-5.0
	Steam room size tiled light wall not ventilated	2.0-4.0	14.0-23.0	2.0-6.0
	Steam room size tiled light wall ventilated	2.0-4.0	10.0-16.0	2.0-4.0
	Steam room size tiled stone wall not ventilated	2.0-4.0	12.0-18.5	2.0-4.5
	Steam room size tiled stone wall ventilated	2.0-4.0	8.0-13.5	2.0-3.5
Ambient conditions	Storage temperature			
	Ambient temperature			