HARVIA HIDDEN HEATER

HH090400

Harvia Hidden Heater is a practical heater requiring very little space. It is mounted behind the benches and is therefore very well-suited for community saunas.



Features

Main material : Steel

H x W x D : 830.0 x 1175.0 x 255.0 mm

Net weight (kg) : 33.0

Installation location : Wall

ID	GTIN	Output (kW)	Sauna room size min - max m3
HH090400	6417659008310	9 kW	10.0-14.0



Spare parts

Product	ID	Pcs
Heating element 1500W 240V, HH	SPZHH-180	6

Technical details

Technical data	Type / attribute	HH090400
	Color	Stainless Steel
	Power output	9 kW
	Stone sizes	Ø5–10 cm
	Stone amount (kg)	15
Dimensions	Product width	1175
	Product height	830
	Product depth (mm)	255
	Net weight (kg)	33
	Gross weight	34.3
	Package width	1205
	Package height	855
	Package depth	315
Safety and installation dimensions	Safety distance front (non-combustible materials)	90
	Safety distance front (combustible materials)	90
	Safety distance side (non-combustible materials)	80
	safety distance to the side wall (combustible materials)	80
	Safety distance (Ceiling)	1070
	Room min. height(depends on connections and therefore from output, star/delta)	1900
	Installation opening height	1900
	Installation opening width	1255
	Installation opening depth	345



Technical images

Heater Ofen	Output Leistung kW	Saunaroom Saunakabine Cubic vol. Rauminhalt		Height Höhe	Min. distances Min Abstand des ofens A	B	C	Cables Kabel To control unit zum Steuer-gerät	To control unit zum Steuer-gerät	Power supply cable to heater Anschlusskabel zum Ofen	Fuse Sicherung 400 V 3N~
Width/Breite 1175 mm Depth/Tiefe 255 mm Height/Höhe 830 mm Weight/Gewicht 33 kg Stones/Steine max. 15 kg		min m³	max m³	min mm	mm	mm	mm	ML-MK/ MMJ mm²	SSJ mm²	H07RN-F mm²	A
HH6	6,0	6	10	2100	75	1070	80	5 x 1,5	4 x 0,25	5 x 1,5	3 x 10A
HH9	9,0	10	14	2100	90	1070	80	5 x 2,5	4 x 0,25	5 x 2,5	3 x 16A
HH12	12,0	12	17	2100	120	1070	100	5 x 4,0	4 x 0,25	5 x 4,0	3 x 20A

Installation details
Montageinformationen

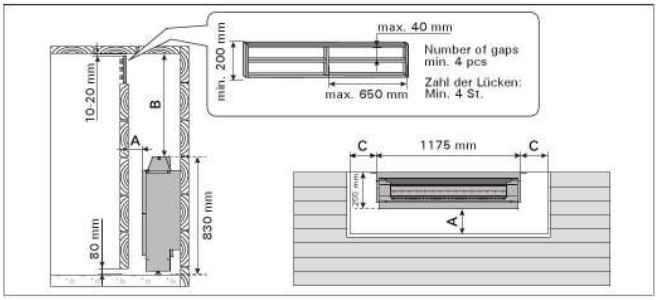

The heater's safety distances
Sicherheitsabstände des Saunaofens

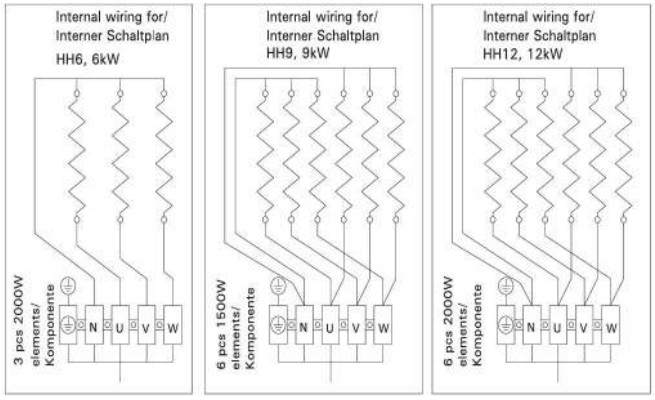

The heater's electrical connections

HH6	1,2,3	2000W/240V	ZHH-170
HH9	1,2,3,4,5,6	1500W/240V	ZHH-180
HH12	1,2,3,4,5,6	2000W/240V	ZHH-170

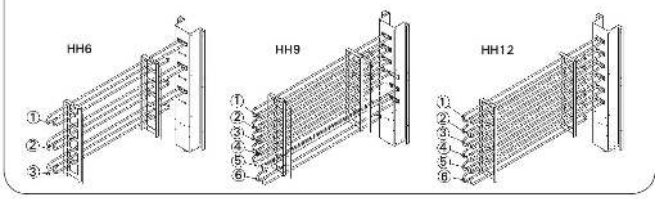

We recommend to use only the manufacturer's spare parts.

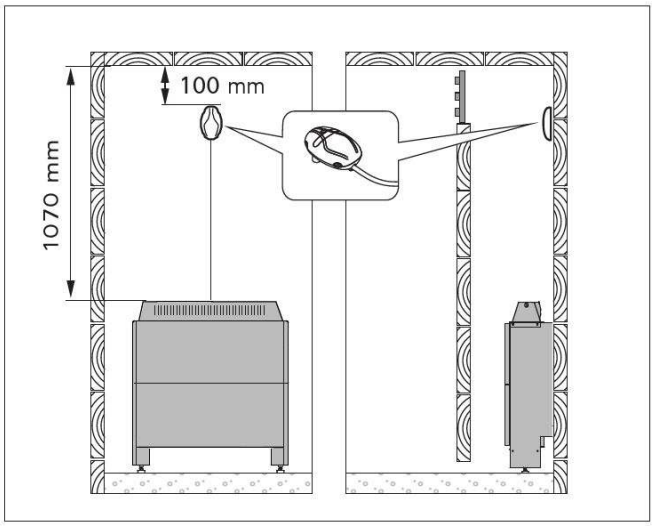

Installing the sensor