Linear 18 Compact WKLI18CPTM

BimSchV2 Certified

EN **Instructions for Installation and Use of Woodburning Stove**

DE **Anleitung für Montage und Gebrauch des holzbeheizten Saunaofens**



26012023 / Y05-1174 B

EN: Contents

Congratulations on your choice! The Harvia sauna stove works best and serves you longest when it is used and maintained according to these instructions.

Read the instructions carefully before installing or using the stove. Keep the instructions for future reference.

INSTALLATION IMAGES....4
WARNINGS AND NOTES....10
1. GENERAL....13
1.1. Technical Data....13
2. INSTRUCTIONS FOR INSTALLATION....13
2.1. Before Installation....13
2.2. Ventilation of the Sauna Room....14
2.3. Protecting the Floor....14
2.4. Safety Distances....14
2.5. Adjustable Legs....14
2.6. Connecting the Stove to a Masonry Flue....14
2.7. Connecting the Stove to a Harvia Steel Chimney....15
2.8. Changing the Opening Direction of the Stove Door15
3. INSTRUCTIONS FOR USE....15
3.1. Preparing the Stove for Use....15
3.2. Burning Material....15
3.3. Sauna Stones....16
3.4. Heating the Stove....16
3.5. Sauna Water....17
3.6. Maintenance....17
3.7. Troubleshooting....17
ACCESSORIES....28
GUARANTEE....29

DE: Inhalt

Wir beglückwünschen Sie zu Ihrer guten Wahl! Der Harvia Saunaofen funktioniert am Besten und am längsten, wenn Sie ihn dieser Anleitung entsprechend benutzen und warten.

Lesen Sie die Anweisungen vor der Montage und Inbetriebnahme des Ofens aufmerksam durch. Bewahren Sie die Anweisungen zum späteren Nachschlagen gut auf.

MONTAGEILLUSTRATIONEN....4
WARNUNGEN UND HINWEISE....19
1. ALLGEMEINES....22
1.1. Technische Daten....22
2. INSTALLATIONSANLEITUNG....22
2.1. Vor der Montage....22
2.2. Belüftung der Saunakabine....23
2.3. Bodenschutz....23
2.4. Sicherheitsabstände....23
2.5. Verstellbare Füße des Ofens....23
2.6. Anschluss des Ofens an einen gemauerten Rauchfng....23
2.7. Anschluss des Ofens an einen Harvia-Edelstahlschornstein....24
2.8. Änderung der Öffnungsrichtung der Ofentür....24
3. BEDIENUNGSANLEITUNG....24
3.1. Vorbereiten des Ofens zur Benutzung....24
3.2. Brennmaterial....24
3.3. Saunaofensteine....25
3.4. Heizen des Ofens....25
3.5. Saunawasser....26
3.6. Wartung....26
3.7. Störungen....27
ZUBEHÖR....28
GARANTIE....29

Suoritustasoilmoitus
Declaration of Performance
Leistungserklärung

DoP1718Pro

HARVIA

Tuotteen tyyppi Product type Produkttyp	Linear 18 Compact	Harvia Finland Oy PL 12 (Teollisuustie 1–7) 40951 Muurame Finland 22 CE
Käyttö Intended use Vorgesehene Verwendung	Jatkuvalämmitteiset saunan kiukaat, polttoaineena puu Multi firing sauna stoves fired by solid wood fuel Mehrfach befeuerbare Saunaöfen Verwendung von naturbelassenem Scheitholz	
Standardit, jotka tuote täyttää The product conforms to the following standards Das Produkt erfüllt die folgenden Standards	Tuotteet on tyyppitestattu standardin EN 15821:2010 mukaisilla testausmenetelmillä Products are tested in accordance to the methods described in the standard EN 15821:2010 Die Produkte sind gemäß den in Standard EN 15821:2010 beschriebenen Prüfverfahren typengetestet	
Ilmoitettu laitos (identifiointinumero) Notified body (identification number) Gemeldete Stelle (Identifikationsnummer)	TÜV SÜD Industrie Service GmbH, D-80399 München, Germany (0036)	

Ilmoitetut suoritustasot/Declared performance/Erklärte Leistung		
Perusominaisuudet Essential characteristic Wesentliche Merkmale	Suoritustaso Performance Leistung	Yhdenmukaistettu tekninen eritelmä Harmonised technical specification Harmonisierte technische Spezifikation
Suojaetäisyydet palaviin aineisiin (mm) Safety distances to combustible materials (mm) Sicherheitsabstände zu brennbaren Materialien (mm)	> See *Safety distances* > Siehe *Sicherheitsabstände*	EN 15821:2010
Paikalliset sertifikaatit Local certificates Lokale Zertifikate	BimSchV2	
Paloturvallisuus (ympäristön rakenteiden syttymisriski) Fire safety (initiation, risk to adjacent elements) Brandsicherheit (Brandgefahr der angrenzenden Bauteile)	Hyväksytty Pass Erfüllt	
Palamiseen vaikuttavien osien vaatimuksenmukaisuus Emission of combustible products Emission von unbrennbaren Stoffen	Hyväksytty Pass Erfüllt	
Pintalämpötila Surface temperature Oberflächentemperatur	Hyväksytty Pass Erfüllt	
Vaarallisten aineiden päästö Release of dangerous substances Abgabe gefährliche Stoffe	NPD	
Puhdistettavuus Cleanability Reinigungsmöglichkeit	Hyväksytty Pass Erfüllt	
Savukaasun lämpötila* Flue gas temperature* Abgastemperatur*	280 °C	
Mekaaninen kestävyys Mechanical resistance Mechanische Beständigkeit	Hyväksytty Pass Erfüllt	
Lämmöntuottoteho saunahuoneeseen Sauna room heating output Thermische Leistung	14,3 kW	
Hiilimonoksidipäästö 13 % O_2 Carbon monoxide emission at 13 % O_2 CO-emission 13 % O_2	1144 mg/m^3	
Hiilimonoksidipäästö (%) 13 % O_2 Carbon monoxide emission (%) at 13 % O_2 CO-emission (%) 13 % O_2	0,092 %	
Hiukkaspäästö 13 % O_2 Dust emission at 13 % O_2 Staub 13 % O_2	27 mg/m^3	
Hyötysuhde Total efficiency Wirkungsgrad	74,3 %	
Savukanavan veto* Flue draught* Förderdrück*	12 Pa	
Polttoaineen lisäysmäärä Refuelling loads Brennstoffaufgabemenge	2,9 kg	
Kestävyys Durability Dauerhaftigkeit	Hyväksytty Pass Erfüllt	
Savukaasun massavirtaus* Flue gas mass flow* Rauchgasmassenstrom*	16,7 g/s	

* Tulitilan luukku suljettuna/Stove door closed/Tür geschlossen

Muurame, Finland, 10.10.2022

Timo Harvia
Teknologiajohtaja / CTO
timo.harvia@harvia.com
+358 207 464 051

EN **INSTALLATION IMAGES**

DE **MONTAGEILLUSTRATIONEN**

EN: 1. Stove parts

DE: 1. Ofenteile

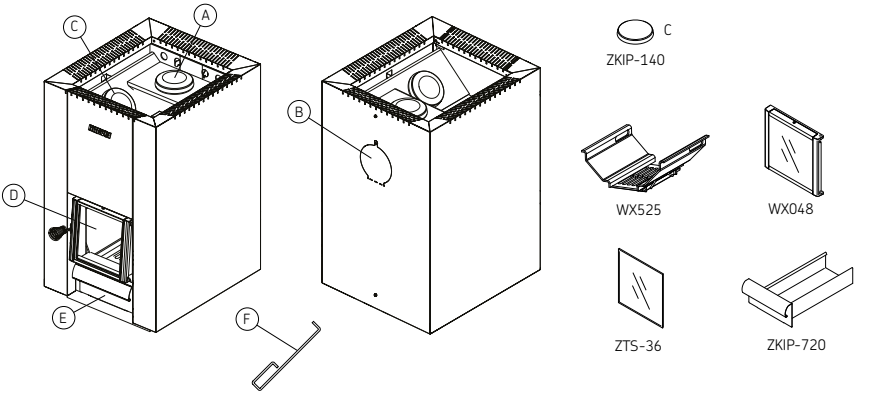

A	Upper connection opening	Obere Anschlussöffnung
B	Rear connection opening	Hintere Anschlussöffnung
C	Soot opening	Rußöffnung
D	Stove door	Ofentür
E	Ash box	Aschekasten
F	Tool for opening and closing the stove door and ash box	Das Werkzeug zum Öffnen und Schließen von Ofentür und Aschekasten.

EN: 2. Combustion air channels

DE: 2. Verbrennungsluftkanäle

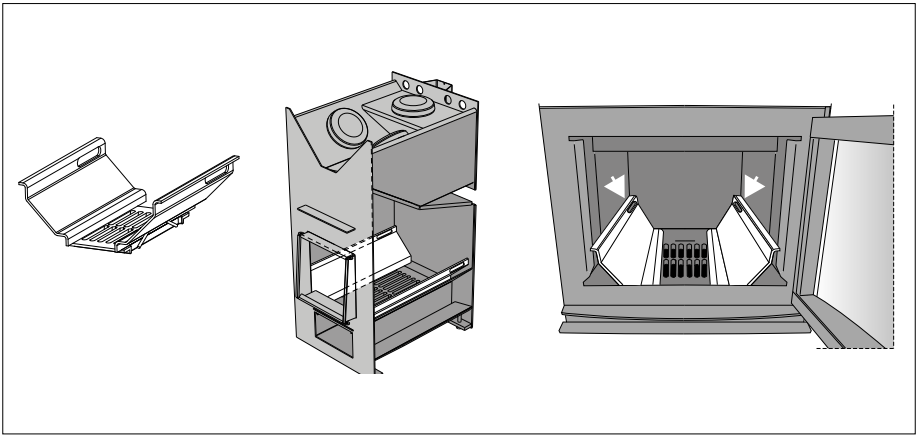

EN: 3. Ventilation of the Sauna Room

DE: 3. Belüftung der Saunakabine

› 2.2.

Gravity exhaust ventilation
Schwerkraftentlüftung

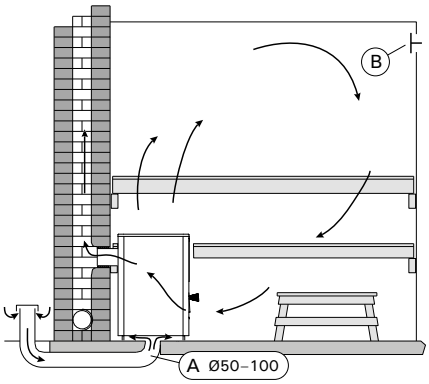

Mechanical exhaust ventilation
Mechanische Entlüftung

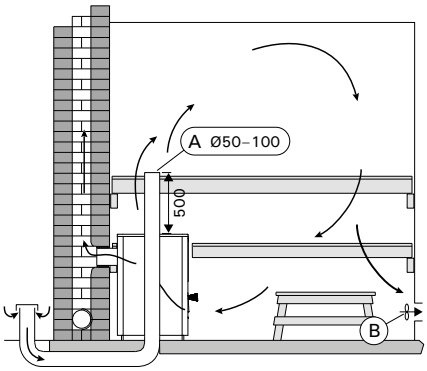

EN: 4. Protecting the floor

DE: 4. Bodenschutz

› 2.3.

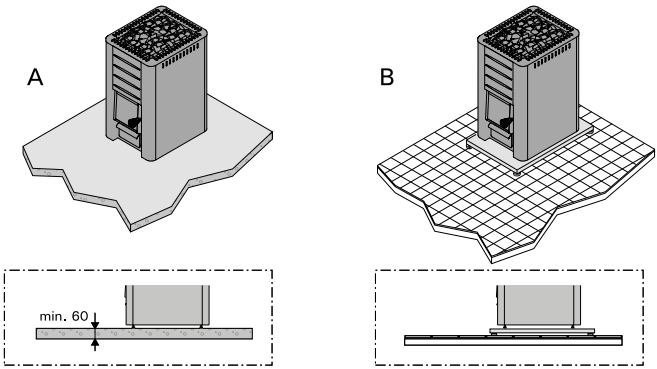

A	**Concrete floor without tiles.** The stove can be installed on a concrete floor without any specific safety measures, if the concrete is at least 60 mm thick. Make sure that there are no wires or water pipes in the concrete cast below the stove.	**Betonboden ohne Fliesen.** Auf Betonboden kann der Ofen ohne besondere Sicherheitsmaße aufgebaut werden, solange der Beton mindestens 60 mm dick ist. Vergewissern Sie sich, dass sich in dem Beton unter dem Ofen weder elektrische Kabel noch Wasserleitungen befinden.
B	**Tile floor.** The floor glues and plasters and waterproof materials used below the tiles are not resistant to the heat radiation of the stove. Protect the floor with the Harvia protective bedding or similar heat radiation protection.	**Fliesenboden.** Die unter den Fliesen benutzten Klebstoffe, Mörtel und wasserfesten Materialien können der Wärmestrahlung des Ofens nicht standhalten. Schützen Sie den Boden mit der Schutzplatte von Harvia oder einem ähnlichen Hitzeschutz.
C	**Floor made of inflammable material.** Protect the floor with the Harvia protective bedding. If the floor in front of the stove door is made of inflammable material, install floor protection made of nonflammable material.	**Boden aus brennbarem Material.** Schützen Sie den Boden mit der Schutzplatte von Harvia Wenn der Untergrund auf der Seite der Ofentür aus brennbaren Material ist, bringen Sie an dieser Stelle einen Schutz aus feuerfestem Material an.

EN: 5. Safety distances

DE: 5. Sicherheitsabstände

See WARNINGS AND NOTES!
Siehe WARNUNGEN UND HINWEISE!

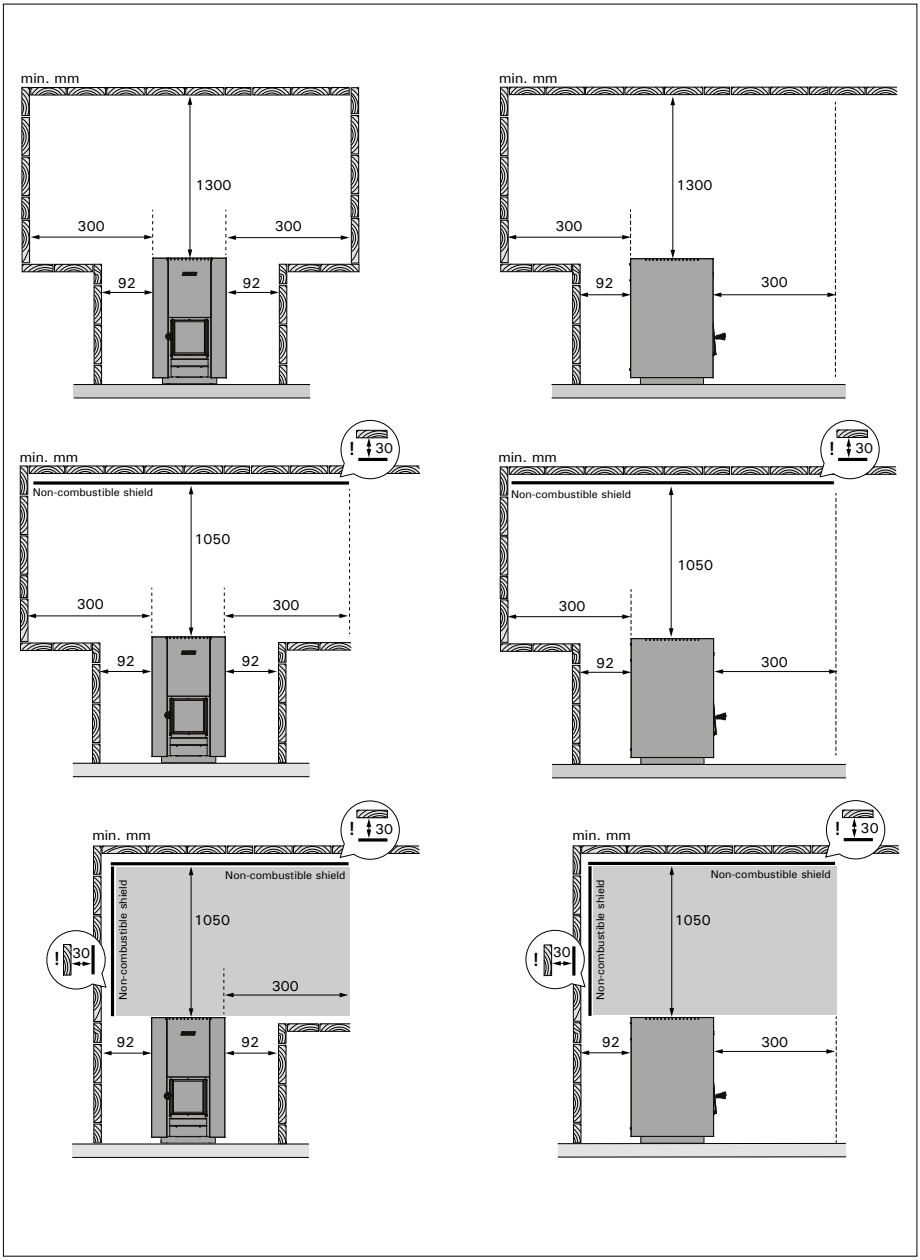

EN: 6. Rear connection opening

DE: 6. Die hintere Anschlussöffnung

› 2.6.

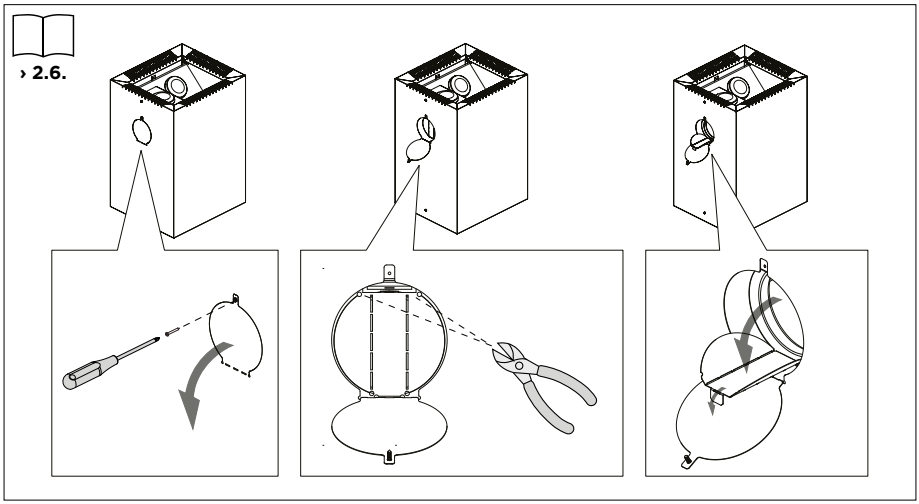

EN: 7. Upper connection opening

DE: 7. Die obere Anschlussöffnung

› 2.6.

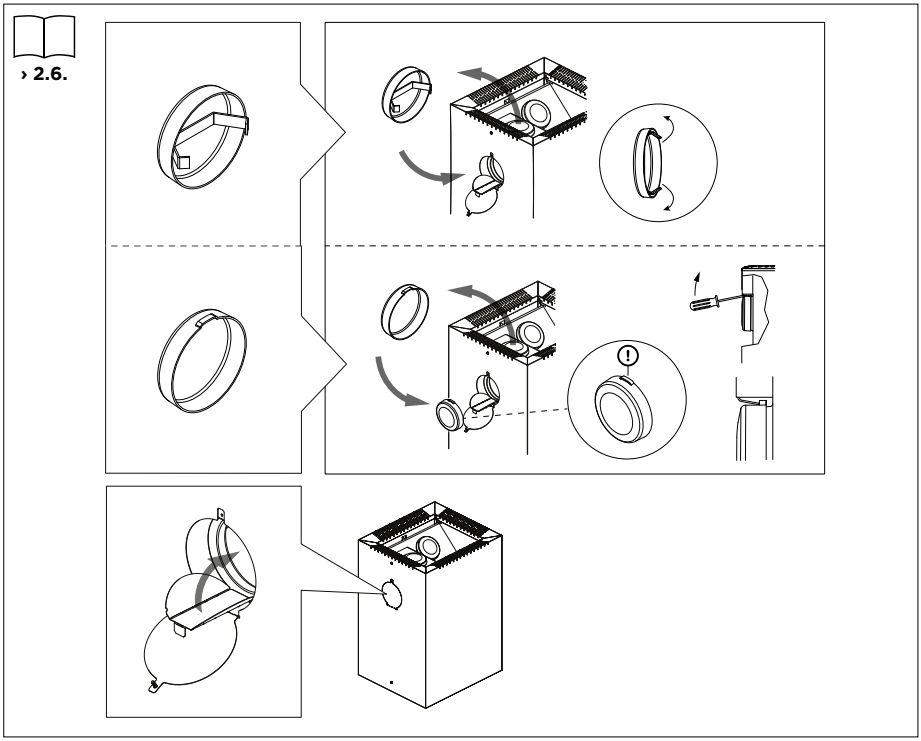

EN: 11. Connecting the stove to a Harvia steel chimney

DE: 11. Anschluss des Ofens an einen Harvia-Edelstahlschornstein

› 2.7.

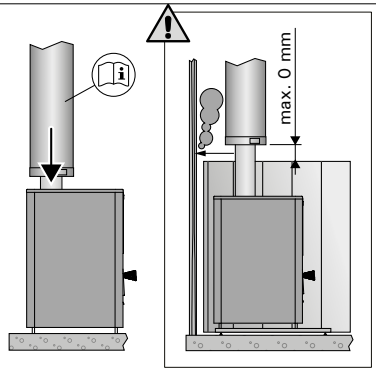

EN: 12. Changing the Opening Direction of the Stove Door

DE: 12. Änderung der Öffnungsrichtung der Ofentür

› 2.8.

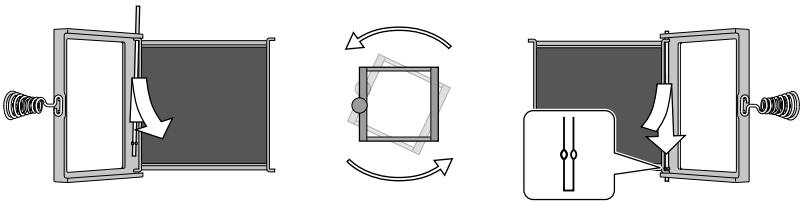

EN: 13. Sauna Stones

DE: 13. Saunaofensteine

› 3.3.

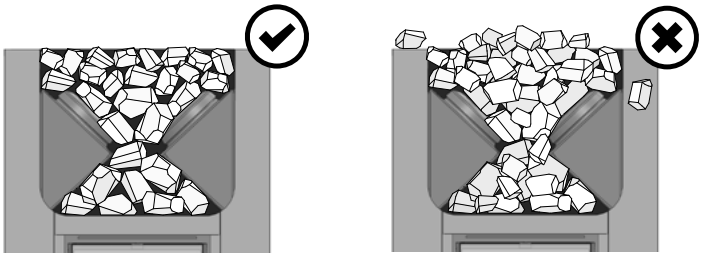

Place the larger stones at the bottom and the smaller ones on the top.	Legen Sie die größeren Steine nach unten und die kleineren nach oben.
Make sure that air circulates between the stones.	Zwischen den Steinen muss Luft zirkulieren können.
Do not place stones against the frame around the stone space or on top of it.	Legen Sie keine Steine gegen oder auf das Rost um die Steinkammer herum.
Do not place stones between the grille and the stove body!	Legen Sie keine Steine zwischen den Rost und den Ofenkorpus!

WARNINGS AND NOTES



READ THE WARNINGS AND MANUAL CAREFULLY BEFORE USING THE PRODUCT!

INSTALLATION AND MAINTENANCE



The sauna stove is designed for the heating of a sauna room to bathing temperature. It is not to be used for any other purpose!



WARNING! It is absolutely necessary to install the heater according to values stated in the instructions of installation and use. Neglecting them causes a risk of fire.



WARNING! Before installing the stove make sure that all safety distance requirements are fulfilled. There shall be no electrical devices, wires or inflammable materials within the established safe-ty distances around the stove.



WARNING! Verify the safety distances required for the chimney and accessories from the product's installation instructions!

- **NOTE! Before actual use, a wood-burning stove must be heated in a particular way as explained below. The purpose of the first heating procedure is to burn off the protective paint on the wood-burning stove. As this results in a lot of smoke, do it outdoors! Once the stove has cooled down, remove any residual paint mechanically e.g. with a wire brush and a vacuum cleaner.**
- All local regulations, including those referring to national and European standards need to be complied with when installing the appliance.
- The local fire authorities in charge of approving the installations can provide more detailed information about fire safety regulations.
- The device must be installed in such a way that the warning texts are easy to read after installation.
- The stove shall be installed on a floor with an adequate load-bearing capacity. If the existing floor does not meet this prerequisite, suitable measures (e.g. load distributing plate) shall be taken to achieve it.
- Light-coloured floor materials will become dirty from the ash, particles of stone and metal flakes that fall from the stove. Use floor coverings made of dark materials and dark joint grouts.
- Before installation, ensure unimpeded access for cleaning the stove and sweeping the chimney.
- The stove is not suitable for installation in a shared flue system.
- Arrange for adequate ventilation in the sauna room by ensuring that the intake or exhaust air openings cannot be blocked accidentally.
- If a guardrail is made around the heater, the safety distances specified in the instructions of installation and use manual must be observed.
- If suitable accessories are installed in the device, follow the accessory-specific operating and installation instructions!
- The adjustable feet could scratch the floor surface if the stove is moved on the floor.
- Do not push the flue connection pipe too far into the flue, as the flue may become blocked.
- Seal the flue connection pipe to the opening in the fireproof wall with e.g. fireproof mineral wool.
- Use protective gloves when piling the stones.
- Rinse any stone dust off the stones before placing them in the heater.
- Ceramic ‘stones’ and soft soapstone are not allowed.
- Do not drop stones in to the stone space.
- Do not stack the stones too tightly to allow air to circulate between them.

- Do not pile a stack of stones on the heater.
- No such objects or devices should be placed inside the heater stone space or near the heater that could change the amount or direction of the air flowing through the heater.
- Direct heat radiation from any uncovered stove body, owing to incorrect stone placement, can cause the materials to become dangerously hot even outside the safety distances.
- Pile the stones or replace the broken stones with new ones at least every year.
- The fireplace, the flue, and the connection pipes should be swept at regular intervals by a qualified professional.
- The flue and the connection pipes must be swept at regular intervals and especially when the stove has not been used for a long time.
- Incomplete combustion and neglected sweeping may result in the build-up of soot in that flue that may ignite. Please see the instructions in case of a chimney fire.
- Only use replacement parts recommended by the manufacturer.
- Modification of the wood-burning stove is prohibited without permission from the manufacturer.

INSTRUCTIONS FOR USE AND BATHING



WARNING! Prolonged, intense heating may cause risk of fire!



Do not cover!

- **WARNING! Beware of hot heater. The stones and metal parts of the heater may burn the skin.**
- **Keep children away from the stove.**
- **Before heating the stove make sure that there are no unnecessary items in the sauna or inside the stove's safety distances. Ext-ractor fans when operated in the same space as the stove, may cause problems.**
- Ensure adequate ventilation during the first few times you heat the sauna.
- Note! The handles become hot while in use. Use the supplied tool for opening and closing the stove door and ash box
- Do not burn the following materials in the stove: Burning materials that have a high thermal value (such as chipboard, plastic, coal, brickets, pellets), painted or impregnated wood, waste (such as PVC plastic, textiles, leather, rubber, disposable diapers), garden waste (such as grass, leaves), liquid fuel.
- Place the firewood into the fire chamber, leaving enough room for the combustion air to flow between the firewood. Place the biggest pieces of wood on the bottom and the smaller ones on the top.
- Place the kindling on the top of the firewood. After kindling, close the door. If necessary, adjust the draft by opening the ash box.
- Observe the correct wood quantities and sizes in the instructions. If necessary, allow the wood-burning stove, the flue and the sauna room to cool down.
- The ash box of the wood-burning stove should always be emptied before heating.
- As the removed ash may include hot embers, do not keep the ash container close to combustible material.
- The wood-burning stove should not be used with the stove door open!
- Ensure sufficient ventilation and combustion air by making sure that openings for them cannot be blocked accidentally.
- The natural draft variation caused by the seasons and weather conditions can be compensated for by adjusting the position of the ash box.
- Excessive draft will cause the whole stove body to become red-hot, which will shorten its life span considerably.
- During bathing and when the sauna room is already heated, the ash box can be closed altogether or kept only slightly open to reduce combustion and wood consumption.
- Throw sauna water on the stones only. If you throw water on the hot steel surfaces, they may blister due to the large temperature variation.
- Staying in the hot sauna for long periods of time makes the body temperature rise, which may be dangerous.

- Do not throw or pour too much water on the heater at once, boiling water may splash on bathers.
- Never throw water on the stones when there are people near the heater.
- The maximum volume of the ladle is 0.2 litres.
- Do not throw any other water on the heater than that specified in the instructions manual of the heater.
- Only special aromas designed for sauna water may be used according to their instructions.
- Do not let young, handicapped or ill people bathe in the sauna on their own.
- Consult your doctor about any health-related limitations to bathing.
- Consult your child welfare clinic about taking little babies to the sauna.
- Be very careful when moving in the sauna, as the platform and floors may be slippery.
- Never go to a hot sauna if you have taken alcohol, strong medicines or narcotics.
- Never sleep in a hot sauna.
- Sea air and a humid climate may corrode the metal surfaces of the heater.
- Do not hang clothes to dry in the sauna, as this may cause a risk of fire.
- Particles disintegrating from the sauna stones may damage sensitive floor coverings and cause fire hazard.

Actions to be taken in case of a chimney fire:

1. Close the ash box, stove door and damper plate (if installed).
2. Contact local fire authority.
3. Do not try to extinguish fire using water.
4. After a sootfire, a chimney sweeper must check the stove and the flue before use

Actions to be taken in the event of a wood-burning stove malfunction, such as overheating:

1. If a malfunction results in a fire, call the fire brigade.
2. Close the ash box and the fire chamber door.
3. Use water to cool any structures that are at risk of catching fire.
4. Cool the exterior of the stove with water.
5. Keep an eye on the stove until it has cooled down completely.
6. After a malfunction, both the fireplace and the flue must be checked before heating the sauna again.

EN

1. GENERAL

Choose the stove model carefully. A stove with too low output must be heated longer and more intensely, which will shorten the stove's life span.

Please note that non-insulated wall and ceiling surfaces (such as brick, glass, tile and concrete surfaces) increase the output requirement of the stove. For every square meter of such wall and ceiling surface you should calculate an additional 1.2 m3 volume. If the sauna walls are made of massive log, the volume must be multiplied by 1.5.

Examples:

- A 10 m3 sauna room with a brick wall 2 m high and 2 m wide is equivalent to a sauna room of approximately 15 m3.
- A 10 m3 sauna room with a glass door is equivalent to a sauna room of approximately 12 m3.
- A 10 m3 sauna room with massive log walls is equivalent to a sauna room of approximately 15 m3.

The dealer or our factory representative can assist you in choosing the stove if needed. You can also visit our website www.harvia.com for further details.

EN

1.1. Technical Data

	Linear 18 Compact
Sauna room volume (m^3)	5-18
Required temperature class of chimney	T600
Diameter of connection opening (mm)	115
Stone quantity (max. kg)	40
Stone size (cm)	Ø10–15
Weight (kg)	60
Width (mm)	450
Depth + fire chamber extension (mm)	510
Height + adjustable legs (mm)	770 + 0–30
Thickness of fire chamber cover (mm)	10
Maximum length of firewood (cm)	39
Diameter of firewood (cm)	8–15
Water container volume (l)	–

2. INSTRUCTIONS FOR INSTALLATION

See WARNINGS AND NOTES!
See INSTALLATION IMAGES!

2.1. Before Installation

Before installing the stove make sure that all safety distance requirements are fulfilled. There shall be no electrical devices, wires or inflammable materials within the established safety distances around the stove.

- All local regulations, including those referring to national and European standards need to be complied with when installing the appliance.
- The stove is not suitable for installation in a shared flue system.
- Verify the safety distances required for the chimney and accessories from the product's installation instructions!
- The local fire authorities in charge of approving the installations can provide more detailed information about fire safety regulations.

2.2. Ventilation of the Sauna Room › Image 3

The ventilation of the sauna room should be arranged as follows:

Gravity exhaust ventilation

A. The fresh air inlet must be placed close to the floor near the stove and
B. its outlet should be as far as possible from the stove and near the ceiling. The stove itself circulates air effectively; the purpose of the outlet is mainly to remove moisture from the sauna after bathing.

Mechanical exhaust ventilation

A. The fresh air inlet must be approx. 500 mm above the stove and
B. the outlet should be close to the floor, for example, below the bench.

2.3. Protecting the Floor › Image 4

See Warnings and notes!

EN

2.4. Safety Distances › Image 5

See Warnings and notes!

2.5. Adjustable Legs

The adjustable legs enable the stove to be installed firmly on an inclined floor. The adjustable range is 0–30 mm. Unscrew the adjustable feet to an extent that allows them to be adjusted using a wrench (17 mm) when the stove is in position. **The adjustable feet could scratch the floor surface if the stove is moved on the floor.**

2.6. Connecting the Stove to a Masonry Flue › Images 6-10

Make an opening in the fireproof wall for the flue connection. Notice that the opening has to be at the correct height, if you intend to use, for instance, a protective bedding. The hole should be slightly larger than the flue connecting pipe. A suitable gap around the connection pipe is ca. 10 mm. It is advisable to round off the inner corners of the flue opening to ensure that the combustion gases can flow freely to the flue. Additional accessories are available to make the installation easier (› Accessories).

Connecting the stove to a masonry flue via the rear connection opening › Images 6, 9

1. Open the cover hatches of the rear connection opening
2. Attach the flue connection pipe to the rear connection opening. Ensure that the pipe fits tightly in place.
3. Push the stove into place. Do not block the flue by pushing the flue connection pipe too far into the flue. If necessary, shorten the pipe.
4. Seal the flue connection pipe to the opening in the fireproof wall, for example, by using fireproof mineral wool. Make sure that the flue connection is tightly sealed. Add more fireproof mineral wool if necessary.

Connecting the stove to a masonry flue via the upper connection opening › Images 6–8, 10

You will need an angled smoke pipe (45° or 90°) for the upper connection (› Accessories).

1. Open the cover hatches of the rear connection opening.
2. Move the blocking plug from the upper connection opening to the rear connection opening.
3. Turn the cover hatches back up and lock it in its position with a screw.
4. Attach the flue connection pipe to the upper connection opening. Ensure that the pipe fits tightly in place.
5. Push the stove in place. Do not block the flue by pushing the flue connection pipe too far into the flue. If necessary, shorten the pipe.
6. Seal the flue connection pipe to the opening in the fireproof wall, for example, by using fireproof mineral wool. Make sure that the flue connection is tightly sealed. Add more fireproof mineral wool if necessary.

2.7. Connecting the Stove to a Harvia Steel Chimney › Images 6-8, 11

A CE-marked Harvia steel chimney can be used to remove combustion gases. Its smoke pipes are made of stainless steel and the chimney has been insulated for fire safety. The chimney has a round cross section. The smoke pipe diameter is 115 mm, and the outer casing is 220 mm.

1. Open the cover hatches of the rear connection opening.
2. Move the blocking plug from the upper connection opening to the rear connection opening.
3. Turn the cover hatches back up and lock it in its position with a screw.
4. Connect the steel chimney's smoke pipe to the upper connection opening of the stove. Ensure that the smoke pipe fits tightly in place. See the detailed instructions in the steel chimney's installation instructions!

If a protective cover is used around the stove, the insulation of the chimney must start from the same level as the top surface of the protective cover or underneath it. (Image 11).

2.8. Changing the Opening Direction of the Stove Door › Image 12

The door to the firing chamber can be installed to open either to the right or to the left.

EN 3. INSTRUCTIONS FOR USE

See WARNINGS AND NOTES!
See INSTALLATION IMAGES!

3.1. Preparing the Stove for Use

Perform the first heating outdoors. The stove body has been painted with protective paint, which will vaporise during the first heating. This will cause the stove body to emit smoke. When the smoking stops, the stove is ready for normal use.

Install the smoke pipes for draught. This will cause odours to vaporize from the smoke pipes as well. The outer casing has been painted with heat-resistant paint, which reaches its final cured state during the first heating. Prior to this, rubbing or sweeping the painted surfaces of the stove must be avoided.

- The sauna stones should not be placed in the stove before the first heating. Place the stones in the stove only when the stove has cooled completely after the first heating.
- Stove with a water container: Clean the water container carefully prior to use. Fill up the water container prior to the first heating.
- **NOTE! Do not throw water on the stove during first heating. Painted surfaces can get damaged!**

3.2. Burning Material

Dry wood is the best material for heating the stove. Dry chopped firewood clinks when it is knocked together with another piece. The moisture of the wood has a significant impact on how clean the burning is as well as on the efficiency of the stove. You can start the fire with birch bark or newspapers.

The thermal value of wood differs from one type of wood to another. For example, you must burn 15 % less beech than birch to obtain the same heat quantity. If you burn large amounts of wood, which has a high thermal value, the life span of the stove will shorten!

Do not burn the following materials in the stove:

- Burning materials that have a high thermal value (such as chipboard, plastic, coal, brickets, pellets)
- Painted or impregnated wood
- Waste (such as PVC plastic, textiles, leather, rubber, disposable diapers)
- Garden waste (such as grass, leaves)
- Liquid fuel

3.3. Sauna Stones › Image 13

See Warnings and notes!

Correctly chosen and properly laid sauna heater stones ensure a long service life and the best possible sauna bath. Sauna heater stones are significant in terms of the unit's safety. In order for the warranty to remain valid, the user is responsible for proper maintenance of the stone space in accordance with the specifications and instructions.

Important information on suitable sauna stones:

- The stones should be 10–15 cm in diameter.
- Suitable sauna stone materials are peridotite, olivine diabase, olivine, and vulcanite.
- Only proper stones meant for the specific purpose should be used as sauna stones. Stones found in nature may contain harmful substances, such as iron pyrite, and therefore should not be used.
- Only use cleavage surface and/or rounded stones for your sauna heater.
- Ceramic stones and decorative stones may only be used if they have been approved by the manufacturer and are used according to their instructions.
- Note that decorative stones are only suitable on the top layer of the stone space.
- Decorative stones must be placed loosely to ensure sufficient air circulation.
- Place any decorative stones so that they do not touch stove's hot inner frame.
- The warranty does not cover any defects that have been caused by the use of decorative stones or by sauna stones not recommended by the manufacturer.
- Wash off dust from the stones before piling them into the stove.

EN

3.4. Heating the Stove

1. **Empty the ash box.**
2. **Place the firewood into the fire chamber, leaving enough room for the combustion air to flow between the firewood.** Place the biggest firewood on the bottom and the smaller ones on the top. Use firewood with a diameter of 8–12 cm (consider the refuelling loads value).
3. **Place the kindling on the top of the firewood.** By starting the fire on the top of the firewood, fewer emissions are produced.
4. **Fire the kindling and close the door.** The amount of draught can be adjusted by opening the ash box. The stove is not intended for use with the stove door open.
   Note! The handles become hot while in use. Use the supplied tool for opening and closing the stove door and ash box › Image 1.
   - When heating the stove, it is generally a good idea to at first keep the ash box slightly open. This ensures that the fire starts burning properly.
   - Excessive draught will cause the stove body to become red-heated, which will shorten its life span considerably.
   - During bathing, and when the sauna room is already heated, the ash box can be closed to keep down the fire and decrease wood consumption.
   Note! The values in the CE marking have been measured using a gap of 45 mm in the ash box. Do not open ash box more than 70 mm.
5. **If necessary, place more firewood into the fire chamber when the ember is dying down.** Use firewood with a diameter of 12–15 cm. It takes only a couple of pieces of wood to maintain the bathing temperature (consider the refuelling loads value)

WARNING! Prolonged, intense heating may cause risk of fire!

- **Excessive heating (several full loads in a row, for example) will make the sauna room, stove and the chimney overheat. Overheating shortens the stove's life span and may cause risk of fire.**
- **A good rule of thumb is that temperatures of over 100 ºC are too high in a sauna.**
- **Observe the correct wood quantities noted in the heating instructions. Let the stove, chimney and sauna room cool down if necessary.**

3.5. Sauna Water

The water to be thrown on the heated stones should meet the requirements of clean household water. Only special aromas designed for sauna water may be used. Follow the instructions given on the package. **Throw sauna water on the stones only. If you throw water on the hot steel surfaces, they may blister due to the large temperature variation!**

Water properties	Effect	Recommendation
Humus concentration	Colour, taste, precipitates	<12 mg/l
Iron concentration	Colour, odour, taste, precipitates	<0,2 mg/l
Manganese (Mn) concentration	Colour, odour, taste, precipitates	<0,10 mg/l
Hardness: most important substances are magnesium (Mg) and lime, i.e. calcium (Ca)	Precipitates	Ca: <100 mg/
Chloride-containing water	Corrosion	Cl: <100 mg/l
Chlorinated water	Health risk	Forbidden to use
Seawater	Rapid corrosion	Forbidden to use
Arsenic and radon concentration	Health risk	Forbidden to use

EN

3.6. Maintenance

Stove

- The ash box should always be emptied before heating the stove so that the combustion air that is lead through the box would cool off the fire grate and lengthen its life span. Get a metal container, preferably standing model, to put the ash in. As the removed ash may include hot embers, do not keep the ash container close to combustible material.
- Soot and ashes gathered in the smoke canals of the stove should be removed occasionally through the soot openings.
- Due to large variation in temperature, the sauna stones disintegrate in use. Therefore, they should be rearranged at least once a year or even more often if the sauna is in frequent use. At the same time, any pieces of stones should be removed from the stone space, and disintegrated stones should be replaced with new ones.
- Wipe dust and dirt from the stove with a damp cloth.

Chimney

- The chimney and connection pipes should be swept at regular intervals and especially if the stove has not been used in a long time.
- Due to incomplete burning of fuel and failure of sweeping the chimney, the soot build-up in the flue may ignite. Actions to be taken in case of a chimney fire:
- Close the ash box, stove door and damper plate (if installed).
- Contact local fire authority.
- Do not try to extinguish fire using water.
- After a sootfire, a chimney sweeper must check the stove and the flue before use.

3.7. Troubleshooting

There is no draught in the flue. Smoke comes into the sauna.

- There are leaks in the flue connection. Seal the connection (› Connecting the Stove to a Masonry Flue).
- The brick flue is cold.
- There is low pressure caused by an extractor fan or another device in the room. Make sure there is enough air to compensate.
- Several fireplaces are used at the same time. Make sure there is enough air to compensate.
- The ash box is full.
- The smoke canals of the stove are blocked (› Maintenance).
- The flue connection pipe is too deep in the chimney (› Connecting the Stove to a Masonry Flue).

The sauna does not heat up.

- The sauna is too big in relation to the stove's heating capacity (› Technical Data).
- There is lots of non-insulated wall surface in the sauna (› General).
- The burning material is moist or its quality is otherwise low (› Burning Material).
- The flue does not have a good draught.
- The smoke canals of the stove are blocked (› Maintenance).

The stove stones do not heat up.

- The sauna is too small in relation to the stove's heating capacity (› General).
- The flue does not have a good draught.
- The burning material is moist or its quality is otherwise low (› Burning Material).
- The smoke canals of the stove are blocked (› Maintenance).
- Check the stone placement (› Sauna Stones). Remove the small pieces of stone and stones that are less than 10 cm in diameter from the stone space. Replace the disintegrated stones with large and undamaged ones.

The stove emits smell.

- See section › Preparing the Stove for Use
- The hot stove may emphasize odours mixed in the air that are not, however, caused by the sauna or the stove. Examples: paint, glue, oil, seasoning.

Wooden surfaces of the sauna room blacken

- It is perfectly normal for the wooden surfaces of the sauna room to blacken in time. The blackening may be accelerated by sunlight, heat from the stove, protective agents on the walls (protective agents have a poor heat resistance level), fine particles disintegrating from the sauna stones which rise with the air flow and smoke that enters the sauna, for example, when adding firewood.

EN **ACCESSORIES**

DE **ZUBEHÖR**

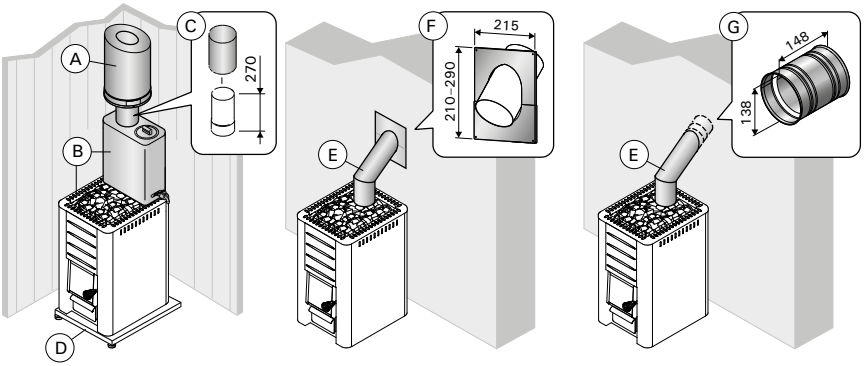

A	**Harvia steel chimney WHP1500.**	**Harvia-Stahlschornstein WHP1500.**
B	**Water heater VL22l.** Installed on the top of the upper connection opening. When a protective sheath or other protection is used that is not large enough to protect the inflammable materials around the stove from the heat radiation of the pipe between the water heater and smoke flue, you must install a radiation cover around the pipe.	**Warmwasserbehälter VL22l.** Oben auf der oberen Anschlussöffnung montiert. Wenn ein Schutzmantel oder ein anderer Schutz benutzt wird, der nicht groß genug ist, um die brennbaren Materialien um den Ofen herum vor der Wärmestrahlung des Rohres zwischen dem Warmwasserbehälter und dem Rauchfang zu schützen, so müssen Sie um das Rohr herum einen Strahlungsschutz anbringen.
C	**Radiation cover WZ020130.** Installed around the smoke pipe.	**Strahlungsschutz WZ020130.** Um das Rauchrohr herum angebracht.
D	**Harvia protective bedding WX018, WL100.**	**Harvia-Schutzplatte WX018, WL100.**
E	**Angle smoke pipe.** Different models.	**Winkelrauchrohr.** Verschiedene Modelle.
F	**Lead-through flange for smoke pipe WZ020115.** Covers the edges of the flue opening and the sealing in the wall. Made of stainless steel. Consists of two parts to make it useable with differently inclined smoke pipes.	**Durchgangskragen für Rauchrohr WZ020115.** Bedeckt die Kanten der Rauchfangöffnung und die Dichtung in der Wand. Aus Edelstahl gefertigt. Besteht aus zwei Teilen, die sich für verschieden geneigte Rauchrohre eignen.
G	**Masonry connector WZ011115.** Connected to the flue opening, does not require other seals. The inner side already has a seal.	**Maueranschluss WZ011115.** Angebracht an die Rauchfangöffnung, benötigt keine weiteren Dichtungen. Die Innenseite verfügt bereits über eine Dichtung.

EN: Guarantee

- The guarantee period for heaters, steam generators and control equipment used in saunas by families is two (2) years.
- The guarantee period for heaters, steam generators and control equipment used in saunas by building residents is one (1) year.
- The guarantee period for heaters, steam generators and control equipment used in commercial saunas facilities is three (3) months.
- The guarantee does not cover any faults resulting from failure to comply with installation, use or maintenance instructions.
- The guarantee does not cover any faults resulting from the use of stones not recommended by the heater manufacturer.
- We recommend to use only the manufacturer's spare parts.

DE: Garantie

- Der Garantiezeitraum für in Familiensaunen verwendete Saunaöfen, Verdampfer und Steuergeräte beträgt zwei (2) Jahre.
- Der Garantiezeitraum für Saunaöfen, Verdampfer und Steuergeräte, die in Gemeinschaftssaunen in Privatgebäuden verwendet werden, beträgt ein (1) Jahr.
- Der Garantiezeitraum für Saunaöfen, Verdampfer und Steuergeräte, die in öffentlichen Saunaeinrichtungen verwendet werden, beträgt drei (3) Monate.
- Die Garantie deckt keine Defekte ab, die durch fehlerhafte Installation und Verwendung oder Missachtung der Wartungsanweisungen entstanden sind.
- Die Garantie deckt keine Defekte ab, die durch die Verwendung von nicht vom Saunaofenhersteller empfohlenen Steinen entstanden sind.
- Es dürfen ausschließlich die Ersatzteile des Herstellers verwendet werden.

GLOBAL:
P.O.Box 12 | Teollisuustie 1-7 |
40951 Muurame | FINLAND |
+358 207 464 000 |
harvia@harvia.fi | www.harvia.com

CENTRAL EUROPE:
sentiotec GmbH | Division of Harvia Group |
Wartenburger Straße 31, A-4840 Vöcklabruck
T +43 (0) 7672/22 900-50 | F -80 |
info@sentiotec.com | www.sentiotec.com