

HARVIA VIRTA PRO

HL135400

The Harvia Virta Pro heater provides ample heating power for saunas in spas, hotels and apartment buildings, for example. Thanks to its strong construction, heating elements divided into two groups and exceptionally easy maintenance, the Virta Pro heater is an excellent choice for heavy duty use. The streamlined and stylish heater always provides even the most demanding bathers with a pro-class sauna experience. Reliable quality by the world's largest sauna heater and stove manufacturer.



Advantages

- A reliable heater with sturdy structure for large saunas and professional use
- The large number of stones guarantees soft and abundant steam. Efficient air circulation heats the sauna very quickly
- Sleek and modern design
- The heating elements are separated from the stones, which results in a long heating element life span
- The maintenance hatch on the front enables quick and easy maintenance without touching the stones

Features

Main material : Steel

H x W x D : 810.0 x 780.0 x 340.0 mm

Net weight (kg) : 41.4

Installation location : Floor

ID	GTIN	Output (kW)	Sauna room size min - max m3
HL135400	6410082613526	13.2 kW	11.0-20.0

Related products



HL2



HL900400S



HL5



HL900400SAX



Spare parts

Product	ID	Pcs
Rubber gasket D18	ZSTM-140	1
Adjustable leg	ZSA-440	
Gasket rubber D18, black	SPZSTM-140	

Technical details

Technical data	Type / attribute	HL135400
	Color	Black
	Power output	13.2 kW
	Stone sizes	Ø10–15 cm
	Stone amount (kg)	100
Dimensions	Product width	780
	Product height	810
	Product depth (mm)	340
	Net weight (kg)	41.4
	Gross weight	45
	Package width	430
	Package height	835
	Package depth	870
Safety and installation dimensions	Safety distance front (non-combustible materials)	50
	Safety distance front (combustible materials)	50
	Safety distance side (non-combustible materials)	50
	safety distance to the side wall (combustible materials)	50
	Safety distance behind (non-combustible materials)	50
	Safety distance (Ceiling)	1290
	Room min. height(depends on connections and therefore from output, star/delta)	2100
	Installation opening height	2100
	Installation opening width	880
	Installation opening depth	440



Technical images

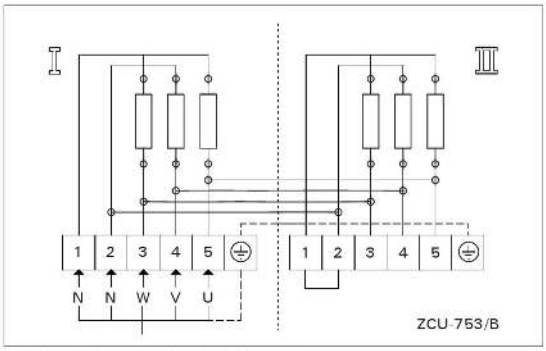

Electrical connections of heater HL135/160 Pro

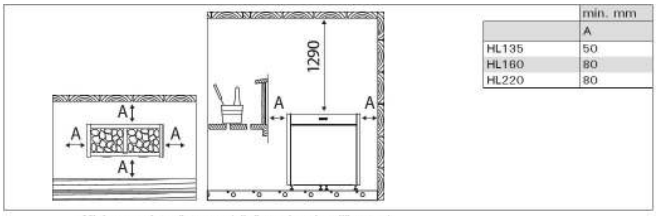

Minimum safety distances (all dimensions in millimeters)

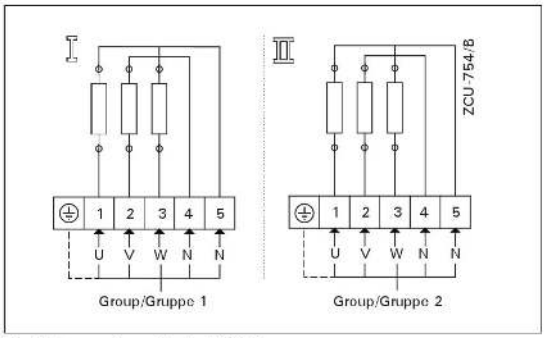

Electrical connections of heater HL220 Pro

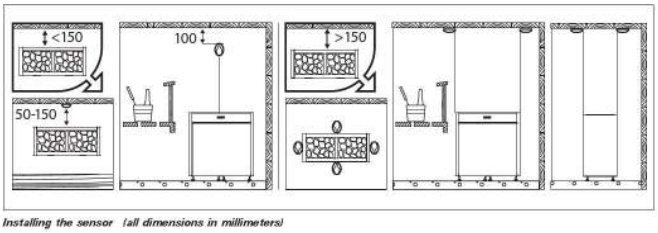

Installing the sensor (all dimensions in millimeters)

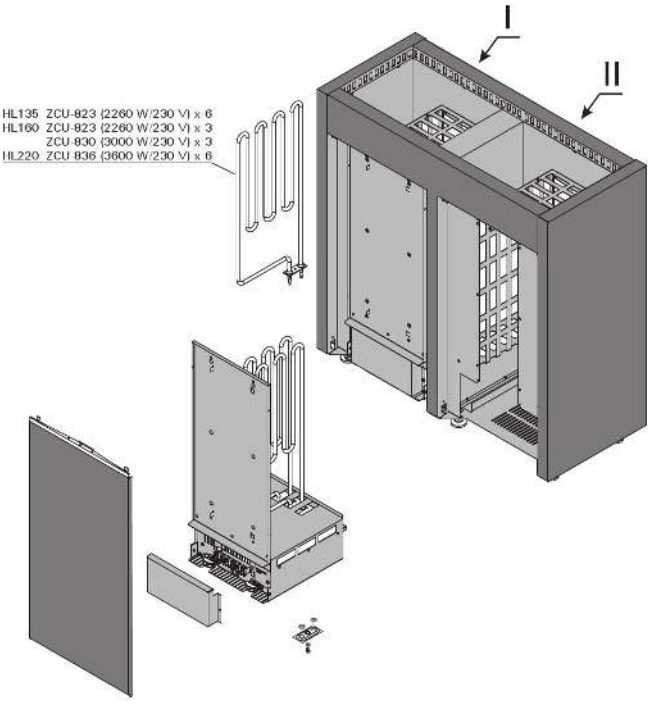

We recommend to use only the manufacturer's spare parts.