Wood burning heater Harvia M3 black

WKM3

The Harvia M3 has a classic design and is suitable for smaller, woodburning saunas. It turns a sauna bath into a pleasurable experience and adds a touch of traditional sauna atmosphere. The even heat and efficient air circulation guarantee an enjoyable bath.



Features

Main material : Steel

H x W x D : 710.0 x 390.0 x 430.0 mm

Net weight (kg) : 45.0

Stone amount (kg) : 30.0

ID	GTIN	Power	Sauna room size min - max m3
WKM3	6417659009423	16.5 kW	6.0-13.0



Spare parts

Product	ID	Pcs
Furnace grate	ZKIP-10	1
Connection pipe	ZKIP-130	1
Ashpan RST Pro	ZKIP-720	1
Hinge pin	ZKIP-50	1
Air-flow spoiler M1/M3	ZKIP-630	1
Carton M3	ZKIP-515	
Front plate M3 chrome	ZKIP-620	
Handle for stove + screws	ZKIP-670	1
Handle for ash box	ZKIP-680	
Stove door with glass	ZROST-048	
	ZKIP-570	
Handle and screws, Chrome	SPZKIP-670	
Adjustable legs for LG150/SL	SPZKIP-918	
Hinge pin	SPZKIP-50	
Door for stove with knob, black	SP010	
Air-flow spoiler M1/M3	SPZKIP-630	
Ashtray black, sauna heaters	SP682	
Cap for smoke hole (Ø 50 mm)	SPZKIP-170	
Glass 184x210x4 mm Stoves 2006-, transparent	SPZTS-36	
Stove door with glass (from 2006)	SP048	
Cast-iron grating 135x290mm, sauna heaters	SPZKIP-10	

Technical details

Technical data	Type / attribute	WKM3
	Color	Black
	Power output	16.5 kW
	Stone sizes	Ø10–15 cm
	Stone amount (kg)	30
Dimensions	Product width	390
	Product height	710
	Product depth (mm)	430
	Net weight (kg)	45
	Gross weight	46.1
	Package width	500
	Package height	765
	Package depth	415
Connections	Flue connection locations	Back, Top
	Chimney connection diameter	115
Safety and installation dimensions	Safety distance front (non-combustible materials)	300
	Safety distance front (combustible materials)	300
	Safety distance right side (combustible materials)	250
	Safety distance right side non-combustible materials	100
	Safety distance left side (combustible materials)	250
	Safety distance left side non-combustible materials	100



Technical details

Technical data	Type / attribute	WKM3
	Safety distance behind (non-combustible materials)	100
	Safety distance behind (combustible materials)	300
	Safety distance (Ceiling)	1200
	Room min. height(depends on connections and therefore from output, star/delta)	1900

Technical images

1.1. Stove Parts
A. Upper connection opening
B. Rear connection opening
C. Soot opening
D. Stove door
E. Ash box

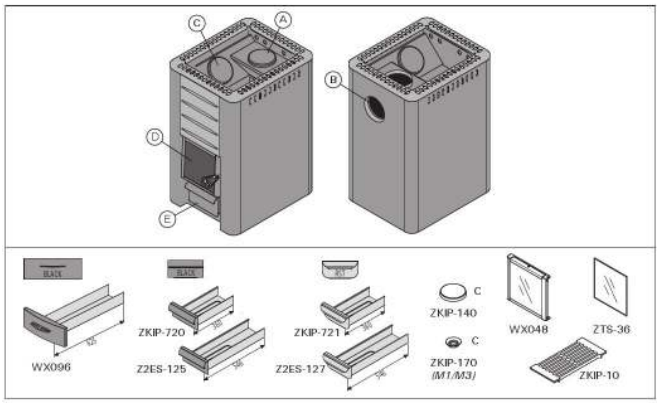

Stove parts. Note! Only use replacement parts recommended by the manufacturer. Unauthorised modification of the stove is prohibited.

	A min.	B min.	C min.	D min.
M1, M2, M3/SL, Classic 140	1200	250	300	300
20 Pro, 20 SL/Duo, 20 ES Pro/S20 Boiler, 20 SL Boiler, Premium-VS, Classic 220/Duo, 20 RS/LS Pro	1300	300	300	300
28 Pro, Classic 280	1380	375	375	375
36, 36 Duo	1250	500	500	500
Linear 16, 16	1300	300	350	400
Linear 22, 22/S, Linear 22 RS/LS/TS, 22 RS/LS/TS	1299	400	380	500
Linear 28	1380	400	400	500

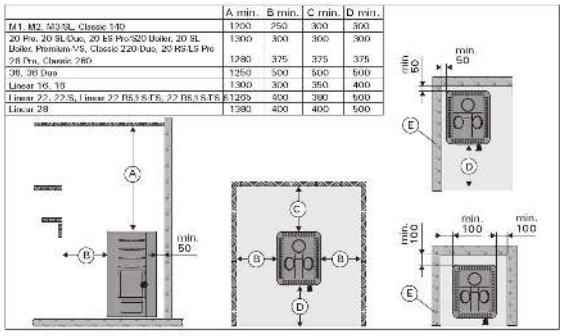

Safety distances (all dimensions in millimeters)

WX017	B min.
M1, M2, M3/SL, 20 Pro, 20 SL/Duo, 20 ES Pro/S, 20 Boiler, 20 SL Boiler, Premium, Classic 140/SL, Classic 220/Duo	300
28 Pro, Classic 280	375
Linear 16, 16	300
Linear 22/28, Linear 22 ES, 22 ES S, 22/S	400

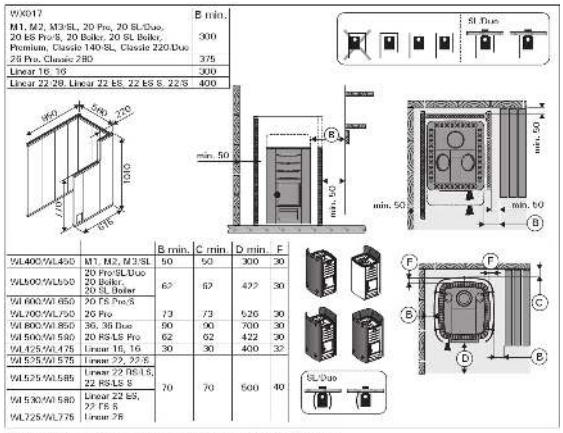

		B min.	C min.	D min.	F
WL400/WL450	M1, M2, M3/SL	50	50	300	30
WL500/WL550	20 Pro/SL/Duo 20 Boiler, 20 SL Boiler	62	62	422	30
WL600/WL650	20 ES Pro/S				
WL700/WL750	28 Pro	73	73	526	30
WL800/WL850	36, 36 Duo	90	90	700	30
WL500/WL580	20 RS/LS Pro	62	62	422	30
WL425/WL475	Linear 16, 16	30	30	400	32
WL525/WL575	Linear 22, 22/S	70	70	500	40
WL525/WL585	Linear 22 RS/LS, 22 RS/LS S				
WL530/WL580	Linear 22 ES, 22 ES S				
WL725/WL775	Linear 28				

Safety distances with protective sheaths (all dimensions in millimeters)