NARVI

Narvi Luosto
Narvi Luosto VS
Narvi Inari



ASENNUS- JA KÄYTTÖOHJE	FI
INSTALLATIONS- OCH BRUKSANVISNING	SE
INSTALLATION AND INSTRUCTION MANUAL	EN
INSTALLATIONS- UND BETRIEBSANLEITUNG	DE

VERSIO 08/2024

EN Content

1. Introduction 20
2. Before you install the sauna heater 20
1.1 Installation information for heater 20
2.1 Steam room 21
2.2 Substrate 21
2.3 Safety clearances 21
2.3.1 Structure made of combustible materials 21
2.3.2 Non-combustible structure 22
2.4 Smoke flue 22
2.5 Ventilation 22
3. Installation and preheating of the sauna heater 23
3.1 Preheating 23
3.2 Regulation of the height 23
3.3 Connection with the stack 23
3.4 Installation of the door 23
3.5 Installation of a water tank (Luosto WT) 24
3.6 Sauna heater stones 24
4. Using the sauna heater 24
4.1 Firewood 24
4.2 Heating 24
4.3 Steam water 26
4.4 Removing the ashes 26
4.5 Maintenance of the sauna heater 26
4.6 Disposal 26
5. Soot fire 27
6. Frequently Asked Questions 27
7. Warranty 27
8. CE 39

DE Inhaltsverzeichnis

1. Einführung 28
1.1 Informationen zum Aufbau von Öfen 28
2. Vor der Installation des Saunaofens 29
2.2 Unterlage 29
2.3 Schutzabstände 29
2.3.1 Konstruktion aus entflammbarem Material 29
2.3.2 Nicht entflammbare Konstruktion 30
2.4 Schornstein 30
2.5 Lüftung 30
3. Installation und Vorheizen des Saunaofens 31
3.1 Vorheizen 31
3.2 Regulierung der Höhe 31
3.3 Anschließen an den Schornstein 32
3.4 Installation der Tür 32
3.5 Installation des Wassertanks (Luosto WT) 33
3.6 Saunasteine 33
4. Betrieb des Saunaofens 33
4.1 Heizmaterial 33
4.2 Heizen 33
4.3 Aufgusswasser 35
4.4 Entfernung von Asche 35
4.5 Wartung des Saunaofens 35
4.6 Außerbetriebsetzung 36
5. Aschebrand 36
6. Häufig gestellte Fragen 36
7. Garantie 37
8. CE 39

Please read the manual carefully before you start installing and using it and keep the manual for future reference. The products are meant only to be used as a sauna heater and for heating the sauna.

Technical data	Width Ø (mm)	Height (mm)	Adjustment range ± (mm)	Weight without stones (kg)	Volume of the water tank	Weight of the stones Ø 10–15 cm (kg)	Weight of the stones Ø 5–10 cm (kg)
LUOSTO	500	750	15	47	–	35	–
LUOSTO WT	600	750	15	54	30 l	35	–
INARI	550	770	15	54	–	20	40

1. INTRODUCTION

To make the most of your sauna heater please read the manual carefully before you start installing and using it and keep the manual for future reference. This user manual contains the technical data of your sauna heater and installation, use and maintenance instructions.

The products are meant only to be used as a sauna heater and for heating the sauna. Do not modify the design of the sauna heater and use only spare parts and accessories recommended by the manufacturer. The data plate included in the delivery of the sauna heater must be glued on the sauna heater, preferably on the lower part of the cover of the sauna heater.

Do not heat the sauna heater if you lack sufficient knowledge, if you are not allowed to use a sauna because of your health condition or you are under the influence of substances causing intoxication. Sauna heaters must not be used by underage people. Do not leave children in the sauna without supervision. A sauna is not meant for drying clothes.

2. BEFORE YOU INSTALL THE SAUNA HEATER

Before installing and using the sauna heater, make sure you are thoroughly familiar with the requirements for installing the sauna heater in the steam room. In case of questions and for additional information do not hesitate to contact the Rescue Board or a construction supervision authority. When installing fireboxes all local laws have to be followed, including those referring to local and European standards.

1.1 INSTALLATION INFORMATION FOR HEATER

Heater model	Sauna room	Minimal safety clearances to the heater (to combustible materials)				Connection			Thickness of the cover of the furnace (mm)	Flue gas mass flow (g/s)
	Volume (m^3)	Sides (mm)	Front (mm)	Top (mm)	Back (mm)	Diameter of the connective flue (mm)	Distance of the bottom edge of the connective flue from the floor (mm)	Central point of the connection from the above from the rear edge of the sauna heater (mm)		
LUOSTO	8–20	300	500 *)	1280	350	119	550	115	10	16
LUOSTO WT	8–20	300 **)	500 *)	1280	350 **)	119	840 a)	165	10	16
INARI	8–18	300	500 *)	1280	350	119	840 a) b)	140	10	16

*) We recommend leaving 1000 mm maintenance area in front of the sauna heater.

**) The distance of Luosto WT (water tank) can be measured from the inner part of the tank (Ø 500).

a) To be connected above the sauna heater with a smoke flue by means of 90° connective flue.

b) To make a connection behind the sauna heater, cut through three steel wires of a stone basket with a backsaw, for example. In this case the distance of the bottom edge of the connection flue from the floor is 550 mm.

2.1 STEAM ROOM

If the walls of a steam room are made of uncovered glass, brick or concrete add 0.8–1.5 m^3 per square meter of such wall and the final choice of the heater shall be made based on the sum of the area. If the heater is installed in a sauna that is normally not heated or the sauna is made of massive logs, multiply the sauna area by 1.5 and choose the heater based on this. The recommended minimum area of a steam room is indicated in clause 1.1. Please follow the values for the minimum area stipulated for a steam room.

We recommend choosing a sauna heater with slightly more power to ensure proper heating of the sauna and to avoid heating the sauna heater to its upper limit. Slightly stronger power ensures a longer lifetime of the sauna heater and provides better steam thanks to a greater quantity of stones.

2.2 SUBSTRATE

A firebox must be installed on the floor with sufficient load-bearing capacity. The durability of the floor must be checked especially carefully, when the sauna heater is installed on a wooden floor. The weight of the sauna heater is shown in clause 1.1. If the existing floor does not meet this prerequisite, suitable measures (e.g. load distributing plate) shall be installed to achieve it.

Concrete floor
The sauna heater may be installed directly on a concrete floor, which is at least 50 mm thick. If underfloor heating cables or pipes are located under the sauna heater, a Narvi installation base must be used to protect them from the sauna heater's thermal radiation.

Floor made of combustible material or a tiled floor, underfloor heating
A Narvi installation base must be installed under the sauna heater, which will protect the floor, moisture barrier and underfloor heating pipes or cables from the thermal radiation of the sauna heater.

2.3 SAFETY CLEARANCES

When installing the sauna heater, safety clearances must be taken into account (1.1). Ignorance of safety clearances causes a fire hazard. If required, additional information can be obtained from the regional branch of the rescue board.

2.3.1 STRUCTURE MADE OF COMBUSTIBLE MATERIALS

The safety clearances are the minimum allowable distances between the sauna heater and structures made of combustible materials. Please observe the stipulated requirements regarding walls, floors, sauna benches, other inventories and storage areas of firewood!

Please observe that the safety clearance of an uninsulated smoke flue from structures made of combustible materials is 1000 mm or any other distance stipulated in the manufacturer's instructions.

Rear and side safety distances can be shortened by using Narvi protective wall shields. Our dealers can provide more info regarding suitable safety walls for sauna heaters.

Protecting a wall made of combustible material

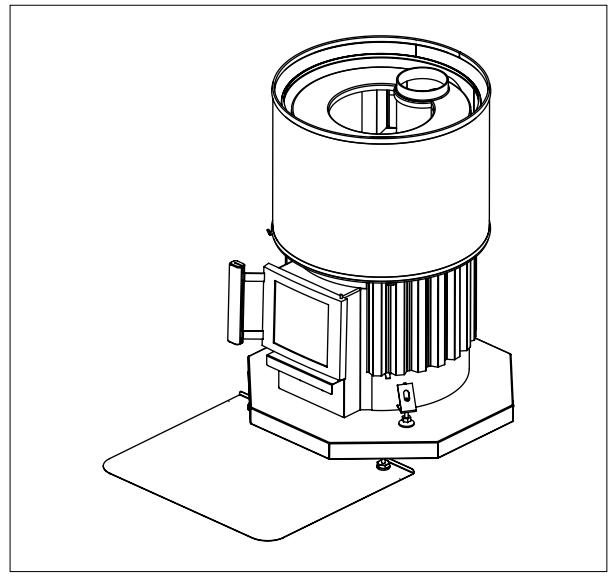

Figure 1.

Figure 1. If the sauna heater is installed on a floor made of combustible materials, Narvi installation base must be used. A piece of sheet metal must be installed in front of the installation base, which extends at least 100 mm over the sides of the heater hatch and at least 400 mm in front of the sauna heater. The sheet metal edges facing the sauna heater must be turned up, so that coal cannot get under the installation base.

2.3.2 NON-COMBUSTIBLE STRUCTURE

If the wall is masonry or other structure classified as noncombustible, it is sufficient to have a 50 mm air gap between the upright surfaces and the wall. If the sauna heater is installed inside a wall recess of non-combustible material, a 100 mm air gap is required to ensure proper air circulation.

2.4 SMOKE FLUE

A smoke flue of the sauna heater must meet the requirements of class T600 irrelevant of the material of the smoke flue. The minimum recommended draft of the smoke flue is 12 Pa.

A modular smoke flue must meet the requirements of class T600 and provided with CE-marking. When installing a modular smoke flue safety clearances stipulated in the installation manual of the smoke flue shall be followed. The minimum recommended diameter of a modular smoke flue is 120 mm. The weight of the smoke flue must not cause load on the sauna heater. The sauna heater should be connected to a separate smoke flue. A smoke flue made of bricks must be at least the so-called half-brick smoke flue.

2.5 VENTILATION

Ventilation of the steam room should be sufficiently efficient and should function so that fresh incoming air is routed as close to the sauna heater as possible. Also proper air circulation has to be provided in the steam room during using the sauna so that air can exit from under the sauna bench or from under the door of the washing room (sufficient gap).

Other possible fireplaces that are used simultaneously must be considered, and make sure there is enough replacement air. Extraction fans working in the same room as the firebox may cause problems. Incoming air inlets should be located so that they do not get blocked (for instance because of snow). A firebox needs combustion air in a volume of 6–10 m3 per kilo of fired wood. The diameter of the ventilation opening must be at least 100 mm. Forced air system should be built according to the design prepared by the designer of the heating, water and ventilation systems.

After using the sauna there shall be a possibility to ventilate and dry the sauna rooms so that air exits via the upper part of the steam room.

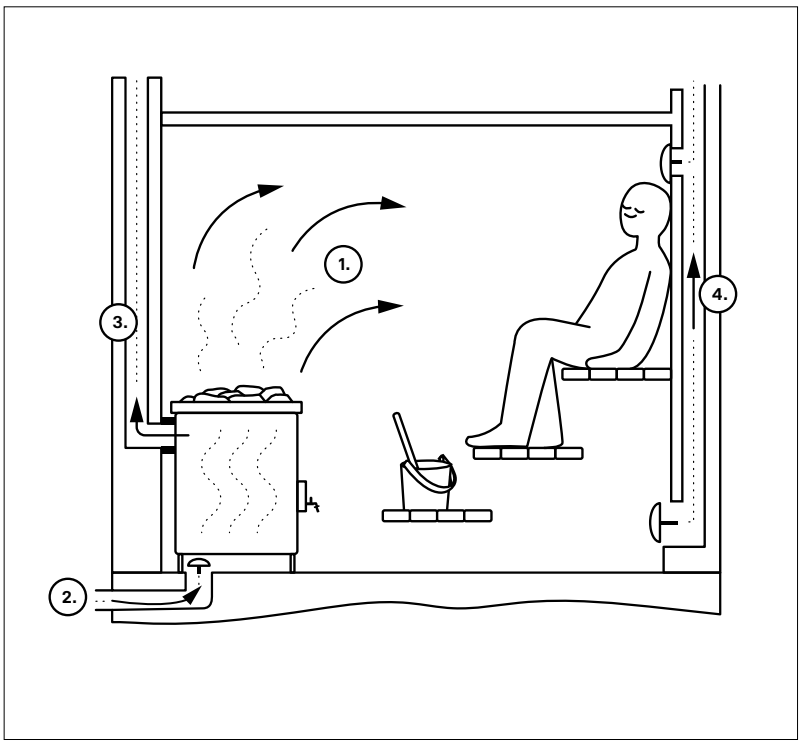

Figure 2.

Figure 2. Ventilation in sauna room

1. Oxygen rich steam

2. Incoming fresh air

3. Chimney outlet

4. Outgoing air

3. INSTALLATION AND PREHEATING OF THE SAUNA HEATER

3.1 PREHEATING

Before use and arranging the stones, the sauna heater must be heated to remove the protective agents. Any protective films and stickers must have been removed before. Preheating shall be carried out on a non-combustible surface and outside, since paint emits harmful solvents and smoke during heating. Use of a connection pipe included in the delivery of the sauna heater in the upper joint improves draft during preheating. 1–2 fireboxes of wood are sufficient for preheating. After preheating and before arranging the stones loose cover material should be removed from the stone compartment of the sauna heater with a steel brush. In case the external surface of the sauna heater is painted, it should not be rubbed or wiped before the first heating. The paint of the sauna heater will achieve sufficient strength only after the first heating. Do not create steam during the first heating.

NB! If the sauna heater is equipped with a water tank please check before preheating that the water tank faucet and safety plug are installed and that the tank is filled with clean water.

3.2 REGULATION OF THE HEIGHT

The legs of the sauna heater are adjustable and can be used for levelling the sauna heater and for adjusting the height. There must be an air gap of at least 25 mm between the sauna heater and the floor. Use a spirit level to check if the sauna heater is level.

3.3 CONNECTION WITH THE STACK

Connecting the sauna heater with the smoke flue

- There are two possibilities to connect the connective flue of Narvi Luosto sauna heater: either from the back or top of the sauna heater. The connective flue of a Narvi Luosto VS sauna heater can be connected only from the top of the sauna heater.

- The connective flue of Narvi Inari can generally be connected from the top of the sauna heater. But to connect the sauna heater from the back you can make a hole in it. For this cut through the three wires of the stone basket with a backsaw.

Carefully compact the flue connections with a fireproof sealant. Any leaks in the connective flue also reduce the draft. Check that the cover of the unconnected connective flue and cleaning hatch of the smoke pipes is securely in place.

Seal the unused opening with the supplied cover. The sauna heater comes with a short smoke flue connection pipe, which can be used to connect the sauna heater's smoke flue from the back. If the connection with the smoke flue is done from the above, a Narvi connective flue or Narvi smoke flue must be used. In case of connection from the above, a Narvi smoke flue tank for heating water or a Narvi stone basket can be installed around the connective flue.

Do not push the connective flue too deep in the smoke flue, because this would hinder the draft. Any leaks in the connective flue also reduce the draft; therefore the connections must be sealed with fireproof sealing material. Leakage in the connective flue causes combustion gases formed in the sauna heater to ignite in the flue. The connection joint of the flue and the sauna heater must be 25 mm. The diameter of the connective flue of the sauna heater and the height from the floor are shown in clause 1.1. Please take into account the clearance distance of the modular smoke flue, see the manufacturer's instructions.

3.4 INSTALLATION OF THE DOOR

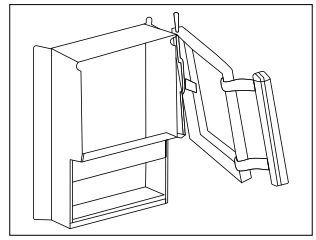

Figure 3.

Figure 3. Open the door and raise the hinge pin up so it comes out of the bottom hinge barrel. Hold onto the door securely and turn the bottom part of the pin and turn the bottom end of the pin up enough that you can pull the pin down and the pin and door come apart. For installation proceed in reverse order. First push the upper edge of the door in its place and thereafter push the pin through the upper eyelet. Thereafter turn the door and pin in their places from below and let the pin into the bottom eyelet. The pin is correctly installed when the wider areas of the pin are facing down. In this case the pin cannot move away from its place. Door installation is easier when you use long flatnose pliers.

3.5 INSTALLATION OF A WATER TANK (LUOSTO WT)

The water tank faucet is installed when the sauna heater is installed. To achieve the correct position of the faucet, try a different number of gaskets in the connection of the faucet and water tank. The delivery of a Narvi Luosto VS water tank includes a casing set consisting of five adjustment plates made of galvanised steel. Install these on the internal wall of the tank. To adjust warming of water remove the required number of casing sets.

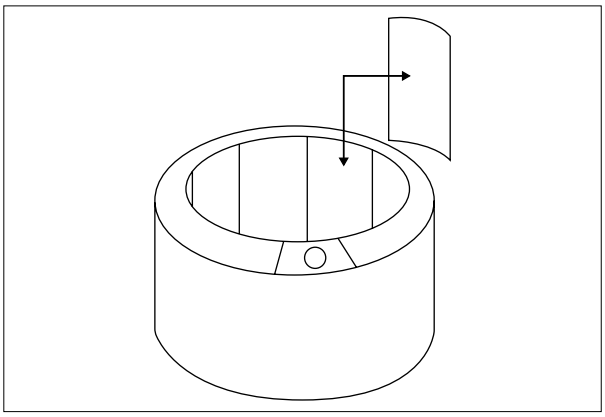

Figure 4. Installation of casing sets.

3.6 SAUNA HEATER STONES

We recommend that you use Narvi olivine diabase stones. Natural stones are not suitable to be used as sauna heater stones 10–15 cm. Before using the stones, they must be washed to eliminate any impurities. Bigger stones are placed in the bottom of the stone compartment and the rest are piled sparsely so that air can move freely between the stones. Flat stones shall be stacked in upright position. The stones must not block air openings and stones must not be stacked over the top surface of the sauna heater. The recommended quantity of stones in the sauna heater is shown in clause 1.1. The use of stones with a regular shape (rectangular, etc.) and light or ceramic stones is forbidden because of a risk of too tight stacking.

In Narvi Luosto WT, sauna stones are not supposed to be placed in the area between the stove body and water tank.

4. USING THE SAUNA HEATER

4.1 FIREWOOD

Only use natural wood logs as fuel. Both hardwood and softwood can be used to heat the sauna heater. The use of chipboard, fibreboard, briquet, pellet, painted or impregnated wood, waste or plastic is prohibited. To ensure clean burning and the largest possible efficiency, the wood must be dry. The moisture content of the wood must be less than 20%. Usually good firewood is sticks of wood the diameter of which is around 5 cm, length around 33 cm and weight around 0.5 kg.

Use of liquid fuel is strongly forbidden, also during firing!

4.2 HEATING

Before heating, make sure that there is no combustible material within the safety clearances. Also make sure that the ash drawer and fire grate are clean and if the sauna heater is provided with a water tank, that it is filled with clean water. Check if there is sufficient draft in the smoke flue. If you hesitate regarding the draft, check it by burning a small quantity of water in the firebox first. During heating the door of the firebox must be closed and the water tank must be filled with water. The sauna heater must not be covered with anything.

To start heating pile firewood over a sufficiently wide area and ignite it from above. For ignition you may use birch bark or paper. Ignition aid should be placed between the upper firewood and it can be topped with some thinner wood sticks or firewood (see figure 5). Igniting from above reduces pollution and ensures cleaner burning.

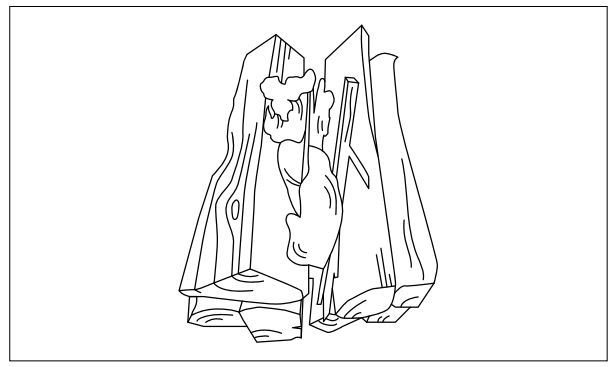

Figure 5. Properly stacked firewood.

The power of the sauna heater can be regulated by the ash drawer. If the ash drawer is closed, the power of the sauna heater is at its lowest and the burning time is longer. If it soughs too much in the sauna heater, reduce the draft. To do this close the ash drawer halfway or completely. This way heat reaches better in the sauna heater, stones can store heat and you do not just heat up the flue. A calm flame is a sign of a correct draft. Avoid heating the sauna heater so that the channels of the stone compartment glow red for a long time because this will overload the firebox and the service life of the sauna heater will be reduced. Overheating may also cause excessive heating of the smoke flue and cause a fire hazard. The connective flue pipe must not be glowing red.

The following table shows the recommended quantities of firewood for different types of sauna heaters and positions of the ash drawer. The values shown in the table meet the values of the nominal power pursuant to standard EN15821. In the test the size of the sauna was determined based on the maximum area for the given sauna heater and temperature of 90 °C was achieved in the sauna. During first times we recommend using less firewood for achieving the desired temperature than values presented in the table. Maximum quantity of firewood per hour (max kg/h) indicated in the table must not be exceeded.

HEATING OF THE SAUNA

	LUOSTO	LUOSTO WT	INARI
1. FIREBOX OF FIREWOOD (sticks of firewood with a diameter around 5 cm, length around 33 cm and weight around 0.5 kg)			
quantity of firewood (kg)	3,5	3,5	3,5
opening of the ash drawer (mm)	20	20	20
1ST ADDITION OF FIREWOOD			
quantity of firewood (kg)	2,5	2,5	2,5
opening of the ash drawer (mm)	10	10	10
2ND ADDITION OF FIREWOOD			
quantity of firewood (kg)	2,5	2,5	2,5
opening of the ash drawer (mm)	10	10	10
MAX KG/H	7	7	7

Do not stack firewood in the firebox over 2/3 of its height. Quantities of firewood are shown in clause 4.1. In the ignition phase the ash drawer can be kept open by 10 mm more than indicated in the table. After igniting put the ash drawer back in the position as shown in the table.

In a sauna heater equipped with a water tank or in a sauna heater that is heated from another room firewood should not be burnt in the front part of the firebox / in the extension, but the firewood must be placed entirely on the grate of the firebox.

Do not forget that the sauna heater and its part become very hot during heating. Always use gloves or other hand protection when being in touch with the parts of the heater. When moving around in the sauna be careful, because the floor and the ceiling of the sauna may be slippery. Be careful – water in the water tank of the sauna heater may be very hot.

One firebox of firewood burns approximately half an hour. A good time for adding firewood is when there are still some blue flames on the coal in the firebox. Before adding firewood you may even slightly smooth coal on the grate. If firewood is added in the flames too early, the temperature of fume gases increases. Do not use the door to push firewood in the firebox.

In case the sauna is used or the sauna heater is heated also after the recommended number of times firewood should be added as shown in the table, firewood should not be added according to the quantities mentioned in the table. A proper quantity for keeping heat is 1-2 logs (approximately 1 kg of firewood) every half an hour. The ash drawer may be closed a bit.

If you add a big quantity of firewood, the temperature of flue gases rises and this can damage the smoke flue and cause a fire hazard. But do not heat continuously over 3 hours. Thereafter, the sauna heater must be allowed to cool down before the next heating.

In case the sauna will not be used any longer and coal is still glowing without flame, extinguishing can be speeded up by increasing the draft. For this open the ash drawer by 10-20 mm. There is enough heat accommodated in the stones of the sauna heater to dry the sauna room.

In the ignition phase the closing pan must be fully open. Before you close the closing pan after heating, check that there is no glowing coal in the firebox. Otherwise fumes may be released in the sauna. Carbon monoxide is an odourless and colourless toxic gas.

If you have not used the sauna heater and smoke flue for a longer period or it is cold, please check before use that the smoke flue is in proper order and that there are no corrosion damages on the sauna heater. Start heating very slowly and with small quantity of firewood so that not to damage the smoke flue.

In case of malfunction, stop the heating immediately and close the fireplace and ash box doors.

4.3 STEAM WATER

Use normal domestic water for steam water.

Quality requirements for domestic water:
humus content < 12 mg/l
iron content < 0.2 mg/l
calcium content < 100 mg/l
manganese content < 0.05 mg/l

Do not use sea water or other salty water.
Also do not use water containing chlorine. The warranty of the sauna heater does not cover damages caused by the use of unsuitable steam water. Do not throw water on the stones, if you yourself or somebody else is right next to the sauna heater. Hot water steam may cause burns.

4.4 REMOVING THE ASHES

The ash drawer must be emptied every time before heating the sauna heater. The ash drawer must be emptied immediately, if ashes fill more than half of the drawer. Otherwise, the airflow through the firebox grate will be hindered, which will shorten the life of the grate.

The ash drawer must be emptied in a non-combustible container (for instance metal bucket) after ash has cooled down. Do not leave the ash bucket standing by the wall (for instance on the terrace). If the smoke flue is equipped with a closing pan, it should be opened for the time the ash is removed. Dust will escape with the draft.

4.5 MAINTENANCE OF THE SAUNA HEATER

The fireplace, the connective flue and the chimney must be swept regularly. Cleaning and sweeping of the chimney is important especially if the fireplace has not been used for a longer period. Besides removing the ashes and having the chimney annually cleaned by a chimney sweep, the sauna heater requires no other maintenance. The condition of the heater should be monitored, and usage must be terminated immediately if deviation is recognized. chimney sweepers are qualified to estimate the condition, and it helps the inspection if the stones are removed before. To open the cleaning hatch of the sauna heater, the upper stones have to be removed from the sauna heater.

The stones of the sauna heater have to be re-arranged once per year and replaced every other year. Cracking stones collapse and fall lower, some stones will erode. Remove eroded and broken stones. Due to insufficient maintenance the sauna heater needs more time for heating, which in its turn causes load on the structure of the sauna heater. The surface of the sauna heater should be cleaned regularly with a damp cloth.

Also the water tank of the sauna heater should be regularly cleaned. Use only clean water to fill the tank. If there is a danger that water can freeze, the water tank should be emptied.

4.6 DISPOSAL

For disposal take the the sauna heater to a public waste recycling centre.

5. SOOT FIRE



IN CASE OF SOOT FIRE (ALSO IF IT HAS ALREADY BEEN EXTINGUISHED) ALWAYS INFORM THE EMERGENCY CENTRE!

If you detect soot fire in the smoke flue, close the ash drawer and the door of the firebox immediately. After soot fire and before the next use of the sauna let a chimneysweeper check the condition of the smoke flue and the sauna heater.

6. FREQUENTLY ASKED QUESTIONS

The sauna heater is drafting poorly

- The sauna heater has not been used in a long time; the smoke flue and sauna heater are damp.
- The sauna heater is not receiving sufficient air; there is a downdraft in the sauna caused by ventilation.
- The sauna heater has not been cleaned in a long time.
- The ash drawer is closed or full of ashes.
- Leakage in the connective flue.

The sauna does not heat up properly

- The firewood is damp.
- The sauna heater has insufficient power.
- The sauna heater or smoke flue is drafting poorly.
- The stones of the sauna heater are dirty or crumbling or stacked too tightly.
- There are too many stones or there are too many small stones.

The sauna heater smells

- The sauna heater has not been properly heated the first time it was done.
- The stones of the sauna heater were not washed before loading.
- Fat or other dirt has accumulated on the stones.
- Steam water is not clean.

7. WARRANTY

Pursuant to consumer protection legislation Narvi sauna heater's warranty period is two years. The warranty covers normal family use provided use, installation and maintenance meet the requirements stipulated in the instructions.

The warranty period starts form the moment that the goods are delivered to the end user. The supplier is not liable in any way for any defects within the framework of the warranty or other defects that appear later than two (2) years after the delivery of the goods to the client. The supplier may decide to either repair the defective goods or replace the defective goods at its own direction. The warranty does not cover possible transport, unloading or installation costs or other corresponding costs. A receipt from the company selling the product serves as proof of warranty.

The client must check the goods immediately after delivery. The client must submit a written notice of claims to the supplier within two (2) weeks of discovering the defect or the moment when the defect should have been discovered. Do not modify the structure of this product. With this product you can only use manufacturer-recommended accessories! Failure to comply with the manual or fire safety regulations can result in a fire or damage to the sauna heater. More detailed information about the fire safety regulations can be obtained from the regional branch of the rescue board, for instance.

The product shall be carefully inspected. Improper use of the product is for instance wrong adjustment of the draft, too large a quantity of firewood burnt in the firebox, too long heating time, wrong arrangement of stones (too much or too tight) and use of salty water (for instance sea water). The warranty does not cover damages caused by improper use of the sauna heater.